Project Lead: Senior Planner - Vanessa
Direct Telephone: 07 4189 9100
Our Reference: MCU25/0010

SOUTH BURNETT REGIONAL COUNCIL

South Burnett Regional Council
ABN 89 972 463 351
PO Box 336
Kingaroy QLD 4610
1300 789 279 or (07) 4189 9100
(07) 4162 4806
info@southburnett.qld.gov.au
www.southburnett.qld.gov.au

28 October 2025

Parkside Group Pty Ltd
C/- Abisa Town Planning
10 North Street
WONDAI QLD 4606

Dear Sir/Madam

Decision Notice
Planning Act 2016

I refer to your application and advise that on 23 October 2025, Council's delegated authority decided to approve the application in full subject to conditions.

Details of the decision are as follows:

APPLICATION DETAILS

Application No:	MCU25/0010
Street Address:	2-30 Kemp Street WONDAI QLD 4606
Real Property Description:	Lot 106 on SP331010
Planning Scheme:	South Burnett Regional Council

DECISION DETAILS

Type of Decision:	Approval
Type of Approval:	Development Permit for Material Change of Use – High Impact Industry (Wooden & Laminated Product Manufacturing) and Environmentally Relevant Activity (ERA) 48(1)(a) – manufacturing and Environment Relevant Activity (ERA 47) (b)
Date of Decision:	23 October 2025

CURRENCY PERIOD OF APPROVAL

The currency period for this development approval is six (6) years starting the day that this development approval takes effect. (Refer to Section 85 "Lapsing of approval at end of currency period" of the *Planning Act 2016*.)

INFRASTRUCTURE

Where conditions relate to the provision of infrastructure, these are non-trunk infrastructure conditions unless specifically nominated as a "***necessary infrastructure condition***" for the provision of trunk infrastructure as defined under Chapter 4 of the *Planning Act 2016*.

ASSESSMENT MANAGER CONDITIONS

GENERAL

GEN1. The development must be completed and maintained generally in accordance with the approved plans and documents and any amendments arising through conditions to this development approval:

Drawing Title	Prepared By	Plan No.	Rev.	Date
Proposed 2024 Site Development Parkside Wondai	Oz-Tac Engineering	Sheet 1 of 9	A	8/3/24
Site Plan	Oz-Tac Engineering	Sheet 2 of 9	A	8/3/24
Site Crossovers	Oz-Tac Engineering	Sheet 3 of 9	A	8/3/24
Site Development Overview	Oz-Tac Engineering	Sheet 4 of 9	A	8/3/24
New Glue Line Building / Office and Amenities	Oz-Tac Engineering	Sheet 5 of 9	A	8/3/24
Glue Line Building with Equipment	Oz-Tac Engineering	Sheet 6 of 9	A	8/3/24
Building Layout with Equipment	Oz-Tac Engineering	Sheet 7 of 9	A	8/3/24
Racker and Stacker Building	Oz-Tac Engineering	Sheet 8 of 9	A	8/3/24
Glue Line Car Park and Office / Amenities	Oz-Tac Engineering	Sheet 9 of 9	A	8/3/24
Site Plan	**Swell Architects**	**DA01**	**D250717**	**5/25**
Factory Floor Plan	**Swell Architects**	**DA02**	**C250717**	**5/25**
Roof Plan	**Swell Architects**	**DA03**	**C250717**	**5/25**
Elevations	**Swell Architects**	**DA04**	**C250717**	**5/25**
Sections	**Swell Architects**	**DA05**	**C250717**	**5/25**

Document Title	Prepared By	Ref No.	Rev	Date
Site Based Management Plan	Range Environmental Consultants	~~J001401~~ **J002200**	~~3~~**5**	~~21/2/24~~ **8/4/25**
Environmental Assessment	**Range Environmental Consultants**	**J002200**	**2**	**8/4/25**
Preliminary Stormwater Management Plan	**ATC Engineers**	**-**	**4**	**21/3/25**

DEVELOPMENT PERIOD – MCU

MCU1. The *relevant period* for this development approval for a Material Change of Use (High Impact Industry) is six (6) years after the development approval starts to have effect.

PARTICULAR USE

MCU2. This Development Permit is for a High Impact Industry (Wooden and Laminated Product Manufacturing **and Briquette Factory**) as stated and as shown on the Approved Plans and does not imply or comprise an approval for any other use(s).

SITE OPERATIONS

MCU3. The carrying out of the operations of the High Impact Industry (Wooden and Laminated Product Manufacturing **and Briquette Factory**) on site is to be in accordance with the Site Based Management Plan, Revision ~~3~~**5**, dated ~~21 February~~

~~2024~~**8 April 2025** and prepared by Range Environmental Consultants, as referenced at Condition GEN1.

Timing – At all times.

REFUSE COLLECTION

MCU4. Provision must be made for the storage and removal of refuse in accordance with the *Waste Reduction and Recycling Regulation 2011*.

MCU5. Any areas that are dedicated for the collection and/or storage of solid waste on the premises are to be:
(a) level;
(b) provided with impervious hard stand and drained; and
(c) if facing either the street frontage or adjoining properties, screened by a 1.8m high fence around the full perimeter.

MCU6. Refuse bin areas are to be provided for the washing out of the refuse bins and in connection with this:
(a) all tap outlets must be fitted with backflow prevention devices;
(b) the floor areas are to be drained to sewer; and
(c) areas are to be covered and drainage designed such that water not associated with the washing out process (e.g. rainfall) does not enter the sewer.

REGULATED WASTE DISPOSAL

MCU7. All regulated waste is to be stored indoors and removed from site by a licensed Regulated Waste Contractor as outlined in the Site Based Management Plan, Revision ~~3~~**5**, dated ~~21 February 2024~~**8 April 2025** and prepared by Range Environmental Consultants, as referenced at Condition GEN1.

WOOD SHAVINGS AND WOOD OFFCUTS DISPOSAL

MCU8. The disposal of wood shavings and wood offcuts is to be carried out in a manner that does not cause material or serious harm to soil or water / air quality and in accordance with the management actions in the Site Based Management Plan, Revision ~~3~~**5**, dated ~~21 February 2024~~**8 April 2025** and prepared by Range Environmental Consultants, as referenced at Condition GEN1.

MANUFACTURING PROCESSES

MCU9. All timber manufacturing and glulam production processes are to be undertaken strictly indoors of the Glue Line Building and carried out in a manner that minimises noise, air, odour or light emissions from the site and in accordance with the management actions in the Site Based Management Plan, Revision ~~3~~**5**, dated ~~21 February 2024~~**8 April 2025** and prepared by Range Environmental Consultants, as referenced at Condition GEN1.

STORAGE OF HAZARDOUS CHEMICALS

MCU10. The storage of all hazardous chemicals is to be within the climate-controlled bunded rack within the Glue Line Building as depicted on 'Building Layout with Equipment' Drawing, Sheet 7 of 9, Revision A (Reference No. OZ-WON-24-03-01), prepared by Oz-Tac Engineering.

MCU11. Implement and maintain management actions for the storage of hazardous chemicals and dangerous goods in a manner that does not cause environmental harm and in accordance with the Site Based Management Plan, Revision ~~3~~**5**, dated ~~21 February~~

~~2024~~**8 April 2025** and prepared by Range Environmental Consultants, as referenced at Condition GEN1.

SPILL AND LEAKS PREVENTION

MCU12. Implement and maintain spill and leaks prevention management actions in a manner that does not cause material or serious harm to soil or water / air quality and in accordance with the Site Based Management Plan, Revision ~~3~~**5**, dated ~~21 February 2024~~**8 April 2025** and prepared by Range Environmental Consultants, as referenced at Condition GEN1.

FUEL STORAGE AND REFUELLING

MCU13. The storage of fuel on site and the refuelling of plant and equipment on site is not permitted.

LIGHTING

MCU14. All outdoor lighting must be designed, installed, operated and maintained to comply with the requirements of *AS4282 – Control of the obtrusive effects of outdoor lighting*.

LANDSCAPING

MCU15. A minimum 3.0m wide strip of landscaping is to be provided to the front boundary of the site along Kemp Street for the full extent of car parking **and the Briquette Factory**.

MCU16. The site is to be landscaped in accordance with Planting Guidelines – Helping South Burnett Residents Select Appropriate Plans. The landscape buffer is to improve visual amenity or to reduce noise/dust by planting in at least 2 rows.

FENCING

MCU17. Existing boundary fencing to be maintained.

STREET NUMBERING

MCU18. Provide clear and legible signage incorporating the street number for the benefit of the public and must include contact phone number/s of the operator of the storage facility. Signage and numbering must be installed on the premises prior to Commencement of Use.

HOURS OF OPERATION

MCU19. Hours of operation for the development are 7.00am to 5.30pm Monday to Friday (excluding public holidays).

Wooden and laminated product manufacturing **and milling** is limited to the hours of 7.00am to 3.30pm Monday to Friday (excluding public holidays) in accordance with the Site Based Management Plan, Revision ~~3~~**5**, dated ~~21 February 2024~~**8 April 2025** and prepared by Range Environmental Consultants, as referenced at Condition GEN1.

ENVIRONMENTAL HARM

MCU20. The *Environmental Protection Act 1994* (EP Act) states that a person must not carry out any activity that causes, or is likely to cause, environmental harm unless the person takes all reasonable and practicable measures to prevent or minimise the harm.

Environmental harm includes environmental nuisance. In this regard persons and entities involved in the civil, earthworks, construction and operational phases of this

development are to adhere to their 'general environmental duty' to minimise the risk of causing environmental harm. Environmental harm is defined by the EP Act as any adverse effect, or potential adverse effect (whether temporary or permanent and of whatever magnitude, duration or frequency) on an environmental value, and includes environmental nuisance.

Therefore, no person should cause any interference with the environment or amenity of the area by reason of the emission of noise, vibration, smell, fumes, smoke, vapour, steam, soot, ash, dust, wastewater, waste products, grit, sediment, oil or otherwise, or cause hazards likely in the opinion of the Administering Authority to cause undue disturbance or annoyance to persons or affect property not connected with the use.

ENVIRONMENTALLY RELEVANT ACTIVITY

MCU21. The following Environmental Authority: Reference No. P-EA-100669267 takes effect on the date that the related approval (MCU23/0025) takes effect. Within 20 business days of the Environmental Authority taking effect, the administering authority must be given written notice of the occurrence. Prior to the commencement of the activity, the administering authority must be given written notice of the proposed date of commencement.

The following Environmental Authority: Reference No. 2506-46402 SRA takes effect on the date that the related approval (MCU25/0010) takes effect. Within 20 business days of the Environmental Authority taking effect, the administering authority must be given written notice of the occurrence. Prior to the commencement of the activity, the administering authority must be given written notice of the proposed date of commencement.

ENGINEERING WORKS

ENG1. Complete all works approved and works required by conditions of this development approval and/or any related approvals at no cost to Council, prior to commencement of the use unless stated otherwise.

ENG2. Undertake Engineering designs and construction in accordance with the Planning Scheme, Council's standards, relevant design guides, and Australian Standards.

ENG3. Be responsible for the full cost of any alterations necessary to electricity, telephone, water mains, sewer mains, stormwater drainage systems or easements and/or other public utility installations resulting from the development or from road and drainage works required in connection with the development.

LOCATION, PROTECTION AND REPAIR OF DAMAGE TO COUNCIL AND PUBLIC UTILITY SERVICES INFRASTRUCTURE AND ASSETS

ENG4. Be responsible for the location and protection of any Council and public utility services infrastructure and assets that may be impacted on during construction of the development.

ENG5. Repair all damages incurred to Council and public utility services infrastructure and assets, as a result of the proposed development immediately should hazards exist for public health and safety or vehicular safety. Otherwise, repair all damages immediately upon completion of works associated with the development.

STORMWATER MANAGEMENT

ENG6. Provide stormwater management generally in accordance with the Preliminary Stormwater Management Report prepared by ATC Engineers ~~& Project Managers~~, Revision ~~2.0~~**4**, dated ~~2 May 2024~~**01 August 2025**, subject to detailed design and except as altered by conditions of this development approval.

ENG7. Ensure that adjoining properties and roadways are protected from ponding or nuisance from stormwater as a result of any site works undertaken as part of the proposed development.

ENG8. Discharge all minor storm flows that fall or pass onto the site to the lawful point of discharge in accordance with the Queensland Urban Drainage Manual (QUDM).

WATER SUPPLY

ENG9. Connect the development to Council's reticulated water supply system via a single connection.

SEWERAGE

ENG10. Connect the development to Council's reticulated sewerage system via a single connection. The connection must be designed in accordance with Council's standards and be approved by Council's Utility Services Section.

Comment: For clarity, only one connection point is permitted for the whole development.

ENG11. Actual connection to Council's live sewerage infrastructure must be undertaken by or under the supervision of Council.

ENG12. Do not build works within 1.5 metres from the centre of any existing sewer pipework or within the Zone of Influence, whichever is the greater (measured horizontally).

ENG13. Maintain a minimum of a 3 metre wide corridor to be maintained for maintenance/upgrade purposes.

ENG14. Ensure that a clear level area of a minimum of a 2.5 metre radius surrounding any existing sewer manholes on the site is provided for future maintenance/upgrade purposes.

ENG15. The above minimum clearances to Council's sewer infrastructure do not preclude the need for works to proposed structures to prevent loading to the sewer system.

SEWER EXTENSION

ENG16. Design and construct a main extension to service the whole of the proposed development that connects to Councils existing gravity sewer network. The location, design, and connection point shall be agreed to Council prior to an Operational Work application being submitted for this construction.

Comment: This condition is imposed pursuant to Section 145 of the *Planning Act 2016*.

PARKING AND ACCESS - GENERAL

ENG17. Design all light vehicle access driveways, circulation driveways, parking aisles and car parking spaces in accordance with Australian Standard 2890.1 – Parking Facilities – Off Street Car Parking, with manoeuvring for a B99 vehicle.

ENG18. Design and construct all manoeuvring, driveway and parking areas with a dust suppressive gravel.

ENG19. Provide a minimum of 42 car parking spaces including a minimum of one person with disability (PWD) car parking spaces. Access to carparks shall be via an internal road. Carparks shall not be accessed directly via a Council road.

ENG20. Design & construct all PWD car parking spaces in accordance with AS2890.6.

ENG21. Provide vehicle bollards or tyre stops to control vehicular access and to protect landscaping or pedestrian areas where appropriate.

ENG22. Line mark or otherwise delineate the car park aisles and driveways within the development with directional arrows on the pavement to enable all vehicles to enter and leave the site in a forward gear.

ENG23. Ensure access to car parking spaces, vehicle loading and manoeuvring areas and driveways remain unobstructed and available for their intended purpose during the hours of operation.

ENG24. Maintain dust suppression treatment to all internal roadways, and vehicle manoeuvring areas ensuring not to have an adverse impact on adjoining properties.

ENG25. In the event that bona fide complaints are received by Council in relation to dust emissions produced from the site, Council reserves the right to require the applicant to provide either concrete, asphalt, or bitumen seal to heavy vehicle manoeuvring areas.

PARKING AND ACCESS - SERVICING

ENG26. Design all access driveways, circulation driveways and the like with a layout that accommodates the turning movements of a B-Double, and ensure that all vehicles are able to enter and exit the site in a forward direction.

VEHICLE ACCESS

ENG27. Construct heavy duty vehicle crossovers between the property boundary and the edge of the Burrows Street/Kemp Street road pavement, generally in accordance with IPWEAQ Std Dwg RS-051, Rev F. Ensure that crossover with and splay is designed to accommodate turning movements of B-Double vehicle, generally as shown on ATC Engineers & Project Managers Dwg B-101 A. Culverts shall be constructed through the table drain where required.

ENG28. Construct any new crossovers such that the edge of the crossover is no closer than 1 metre to any existing or proposed infrastructure, including any stormwater gully pit, manhole, service infrastructure (eg power pole, telecommunications pit), road infrastructure (eg street sign, street tree, etc).

ELECTRICITY AND TELECOMMUNICATION

ENG29. Connect the development to electricity and telecommunication services.

EARTHWORKS - GENERAL

ENG30. Earthworks per site involving cut or fill with a nett quantity of material greater than $50m^3$, requires an Operational Work application.

EROSION AND SEDIMENT CONTROL - GENERAL

ENG31. Ensure that all reasonable actions are taken to prevent sediment or sediment laden water from being transported to adjoining properties, roads and/or stormwater drainage systems.

ENG32. Remove and clean-up sediment or other pollutants in the event that sediment or other pollutants are tracked/released onto adjoining streets or stormwater systems, at no cost to Council.

REFERRAL AGENCIES

The referral agencies applicable to this application are:

Referral Status	Referral Agency and Address	Referral Trigger	Response
Concurrence	State Assessment & Referral Agency PO Box 979 BUNDABERG QLD 4670	Schedule 10, Part 5, Division 4, Table 2 – Non-devolved environmentally relevant activities	The agency provided its response on 20 August 2025 (Reference No. 2506-46402). A copy of the response is attached.
Advice	Ergon Energy Townplanning@ergon.com.au	Schedule 10, Part 9, Division 2, Table 2 – Material Change of use of premises near substation site or subject to an easement	The agency provided its response on 24 June 2025 (Reference No. ECM 19632308 - 24999466). A copy of the response is attached.

A copy of any referral agency conditions is attached.

APPROVED PLANS

The following plans are Approved plans for the development:

Approved Plans

Plan No.	Rev.	Plan Name	Date
Sheet 1 of 9	A	*Proposed 2024 Site Development Parkside Wondai*, prepared by Oz-Tac Engineering.	8/3/24
Sheet 2 of 9	A	*Site Plan*, prepared by Oz-Tac Engineering.	8/3/24
Sheet 3 of 9	A	*Site Crossovers,* prepared by Oz-Tac Engineering.	8/3/24
Sheet 4 of 9	A	*Site Development Overview,* prepared by Oz-Tac Engineering.	8/3/24
Sheet 5 of 9	A	*New Glue Line Building / Office and Amenities,* prepared by Oz-Tac Engineering.	8/3/24
Sheet 6 of 9	A	*Glue Line Building with Equipment,* prepared by Oz-Tac Engineering.	8/3/24
Sheet 7 of 9	A	*Building Layout with Equipment,* prepared by Oz-Tac Engineering.	8/3/24

Sheet 8 of 9	A	*Racker and Stacker Building,* prepared by Oz-Tac Engineering.	8/3/24
Sheet 9 of 9	A	*Glue Line Car Park and Office / Amenities,* prepared by Oz-Tac Engineering.	8/3/24
DA01	D250717	*Site Plan,* prepared by Swell Architects.	5/25
DA02	C250717	*Factory Floor Plan,* prepared by Swell Architects.	5/25
DA03	C250717	*Roof Plan,* prepared by Swell Architects.	5/25
DA04	C250717	*Elevations,* prepared by Swell Architects.	5/25
DA05	C250717	*Sections,* prepared by Swell Architects.	5/25

REFERENCED DOCUMENTS

The following documents are referenced in the assessment manager conditions:

Referenced Documents

Document No.	Rev.	Document Name	Date
J002200	5	*Site Based Management Plan*, prepared by Range Environmental Consultants.	8/4/25
J002200	2	*Environmental Assessment*, prepared by Range Environmental Consultants.	8/4/25
-	4	*Preliminary Stormwater Management Plan,* prepared by ATC Engineers.	1/8/25

ADVISORY NOTES

Not Applicable.

PROPERTY NOTES

Not Applicable.

VARIATION APPROVAL

Not Applicable.

FURTHER DEVELOPMENT PERMITS REQUIRED

Not Applicable.

SUBMISSIONS

Not Applicable.

RIGHTS OF APPEAL

You are entitled to appeal against this decision. A copy of the relevant appeal provisions from the *Planning Act 2016* is attached.

During the appeal period, you as the applicant may suspend your appeal period and make written representations to council about the conditions contained within the development approval. If council agrees or agrees in part with the representations, a “negotiated decision notice” will be

issued. Only one “negotiated decision notice” may be given. Taking this step will defer your appeal period, which will commence again from the start the day after you receive a “negotiated decision notice”.

OTHER DETAILS

If you wish to obtain more information about Council’s decision, electronic copies are available on line at www.southburnett.qld.gov.au, or at Council Offices.

Yours faithfully

DAVID HURSTHOUSE
COORDINATOR DEVELOPMENT SERVICES

Enc: Adopted Infrastructure Charge Notice
Referral Agency Response
Approved Plans/Documents
Appeal Rights

cc SARA & Ergon Energy

INFRASTRUCTURE CHARGES NOTICE

(Section 119 of the Planning Act 2016)

APPLICANT:	Parkside Building Supplies Pty Ltd C/- Brazier Motti Pty Ltd 595 Flinders Street TOWNSVILLE QLD 4810
APPLICATION:	Development Permit for Material Change of Use – High Impact Industry (Wooden & Laminated Product Manufacturing) and Environmentally Relevant Activity (ERA) 48(1)(a) – manufacturing and Environment Relevant Activity (ERA 47) (b)
DATE:	28/10/2025
FILE REFERENCE:	MCU25/0010
AMOUNT OF THE LEVIED CHARGE: *(Details of how these charges were calculated are shown overleaf)*	**$103,985.00** **Total**

$51,992.50	Water Supply Network
$29,115.80	Sewerage Network
$22,876.70	Transport Network
$0.00	Parks and Land for Community Facilities Network
$0.00	Stormwater Network

AUTOMATIC INCREASE OF LEVIED CHARGE:	The amount of the levied charge is subject to an automatic increase. Refer to the Information Notice attached to this notice for more information on how the increase is worked out.
LAND TO WHICH CHARGE APPLIES:	Lot 106 on SP331010
SITE ADDRESS:	2-30 Kemp Street, Wondai
PAYABLE TO:	**South Burnett Regional Council**
WHEN PAYABLE: *(In accordance with the timing stated in Section 122 of the Planning Act 2016)*	Material Change of Use – When the change happens.
OFFSET OR REFUND:	Not Applicable.

This charge is made in accordance with South Burnett Regional Council's ***Charges Resolution (No. 3) 2019***

DETAILS OF CALCULATION

Water Supply

Adopted Charges

Development Description	Number of Units	Units of Measure	Charge Rate	Reference	Amount
High Impact Industry	2079.70 (Briquette facility)	m^2 GFA	$25.00	CR Table 2.2	$51,992.50

Discounts*

Description	Number of Units	Units of Measure	Discount Rate	Reference	Amount
No existing lawful use	-	m^2 GFA	$0.00	CR Table 2.2	$0.00

Sewerage

Adopted Charges

Development Description	Number of Units	Units of Measure	Charge Rate	Reference	Amount
High Impact Industry	2079.70	m^2 GFA	$14.00	CR Table 2.2	$29,115.80

Discounts*

Description	Number of Units	Units of Measure	Discount Rate	Reference	Amount
No existing lawful use	-	m^2 GFA	$0.00	CR Table 2.2	$0.00

Transport

Adopted Charges

Development Description	Number of Units	Units of Measure	Charge Rate	Reference	Amount
High Impact Industry	2079.70	m^2 GFA	$11.00	CR Table 2.2	$22,876.70

Discounts*

Description	Number of Units	Units of Measure	Discount Rate	Reference	Amount
No existing lawful use	-	m^2 GFA	$0.00	CR Table 2.2	$0.00

Parks and Land for Community Facilities

Adopted Charges

Development Description	Number of Units	Units of Measure	Charge Rate	Reference	Amount

Not Applicable	-	-	-	-	$0.00

Discounts*

Description	Number of Units	Units of Measure	Discount Rate	Reference	Amount
Not Applicable	-	-	-	-	$0.00

Stormwater

Adopted Charges

Development Description	Number of Units	Units of Measure	Charge Rate	Reference	Amount
Not Applicable	-	-	-	-	$0.00

Discounts*

Description	Number of Units	Units of Measure	Discount Rate	Reference	Amount
Not Applicable	-	-	-	-	$0.00

Levied Charges

Development Description	Water Supply	Sewerage	Transport	Parks & Land for Community Facilities	Stormwater	Total
High Impact Industry (Briquette facility)	$51,992.50	$29,115.80	$22,876.70	$0.00	$0.00	$103,985.00
Total	**$51,992.50**	**$29,115.80**	**$22,876.70**	**$0.00**	**$0.00**	**$103,985.00**

** In accordance with Section 3.3 of the Charges Resolution, the discount may not exceed the adopted charge. Any surplus discounts will not be refunded, except at South Burnett Regional Council's discretion.*

INFORMATION NOTICE

Authority and Reasons for Charge	This Infrastructure Charges Notice has been given in accordance with section 119 of the *Planning Act 2016* to support the Local government's long-term infrastructure planning and financial sustainability.
Appeals	Pursuant to section 229 and Schedule 1 of the *Planning Act 2016* a person may appeal an Infrastructure Charges Notice. Attached is an extract from the *Planning Act 2016* that details your appeal rights.
Automatic Increase Provision of charge rate ($)	An infrastructure charge levied by South Burnett Regional Council is to be increased by the difference between the Producer Price Index (PPI) applicable at the time the infrastructure charge was levied, and PPI applicable at the time of payment of the levied charge, adjusted by reference to the 3-yearly PPI average[1]. If the levied charge is increased using the method described above, the charge payable is the amount equal to the sum of the charge as levied and the amount of the increase. However, the sum of the charge as levied and the amount of the increase is not to exceed the maximum adopted charge the Authority could have levied for the development at the time the charge is paid.
GST	The Federal Government has determined that contributions made by developers to Government for infrastructure and services under the *Planning Act* 2016 are GST exempt.
Making a Payment	This Infrastructure Charges Notice cannot be used to pay your infrastructure charges. To pay the levied charge, you must request an Itemised Breakdown showing the total levied charge payable at the time of payment. An Itemised Breakdown must be presented at the time of payment. An Itemised Breakdown may be requested by emailing info@southburnett.qld.gov.au

[1] 3-yearly PPI average is defined in section 114 of the *Planning Act 2016* and means the PPI adjusted according to the 3-year moving average quarterly percentage change between financial quarters. PPI Index is the producer price index for construction 6427.0 (ABS PPI) index number 3101 – Road and Bridge construction index for Queensland published by the Australian Bureau of Statistics.

Payment can be made at any of the following South Burnett Regional Council Offices:

- 69 Hart Street, Blackbutt, 4314;
- 45 Glendon Street, Kingaroy, 4610;
- 42 Stephens Street West, Murgon, 4605;
- 48 Drayton Street, Nanango, 4615;
- McKenzie Street, Wondai, 4606; or
- via other methods identified on the Itemised Breakdown.

Enquiries

Enquiries regarding this Infrastructure Charges Notice should be directed to the SOUTH BURNETT REGIONAL COUNCIL, Department of Planning and Land Management, during office hours, Monday to Friday by phoning (07) 4189 9100 or email at info@southburnett.qld.gov.au

DELIVERING FOR QUEENSLAND | Queensland Government

Department of
State Development,
Infrastructure and Planning

SARA reference: 2506-46402 SRA
Council reference: MCU25/0010

20 August 2025

Chief Executive Officer
South Burnett Regional Council
PO Box 336
KINGAROY QLD 4610
info@sbrc.qld.gov.au

Dear Sir/Madam,

SARA Referral Agency Response—2-30 Kemp Street, Wondai

(Referral agency response given under section 56 of the *Planning Act 2016*)

The development application described below was confirmed as properly referred by the State Assessment and Referral Agency (SARA) on 4 June 2025.

Response

Outcome:	Referral agency response - No requirements Under section 56(1)(a) of the *Planning Act 2016*, SARA advises it has no requirements relating to the application.
Date of response:	20 August 2025
Advice:	Advice to the applicant is in **Attachment 1**
Reasons:	The reasons for the referral agency response are in **Attachment 2**

Development details

Description:	Other Change to development permit – Development Permit Material change of use – high impact industry (briquette facility) and environmentally relevant activity 47
SARA role:	Referral agency
SARA trigger:	Schedule 10, Part 5, Division 4, Table 2, Item 1 (10.5.4.2.1) – Environmentally relevant activities (only if ERA has not been devolved to a local government) (Planning Regulation 2017)
SARA reference:	2506-46402 SRA

Wide Bay Burnett regional office
Level 1, 7 Takalvan Street, Bundaberg
PO Box 979, Bundaberg QLD 4670

Assessment manager:	South Burnett Regional Council
Street address:	2-30 Kemp Street, Wondai
Real property description:	Lot 106 on SP331010
Applicant name:	Parkside Group Pty Ltd (Timber Division) C/- Abisa Town Planning
Applicant contact details:	592 Cedar Creek Road, Gheerulla Gheerulla QLD 4574 abisaplanning@outlook.com
Human Rights Act 2019 considerations:	A consideration of the 23 fundamental human rights protected under the *Human Rights Act 2019* has been undertaken as part of this decision. It has been determined that this decision does not limit human rights.

Representations

An applicant may make representations to a concurrence agency, at any time before the application is decided, about changing a matter in the referral agency response (s. 30 Development Assessment Rules).

Copies of the relevant provisions are in **Attachment 3**.

A copy of this response has been sent to the applicant for their information.

For further information please contact Faith Duffy, Planning Officer, on (07) 3882 8464 or via email WBBSARA@dsdilgp.qld.gov.au who will be pleased to assist.

Yours sincerely

Luke Lankowski
Manager, Planning Services

cc Parkside Group Pty Ltd- Timber Division, abisaplanning@outlook.com

enc Attachment 1 - Advice to the applicant
Attachment 2 - Reasons for referral agency response
Attachment 3 - Representations about a referral agency response provisions

Attachment 1—Advice to the applicant

General advice	
1.	Terms and phrases used in this document are defined in the *Planning Act 2016* its regulation or the State Development Assessment Provisions (SDAP), (version 3.2). If a word remains undefined it has its ordinary meaning.

Attachment 2—Reasons for referral agency response

(Given under section 56(7) of the *Planning Act 2016*)

The reasons for SARA's decision are:

- The proposed change complies with the outcomes sought by State code 22: Environmentally relevant activities.
- The proposed development is supported by a range of mitigation measures which ensure potential environmental impacts are minimised.

Material used in the assessment of the application:

- the development application material and submitted plans
- *Planning Act 2016*
- Planning Regulation 2017
- the SDAP, version 3.2, as published by SARA
- the Development Assessment Rules
- SARA DA Mapping system
- Section 58 of the *Human Rights Act 2019*

Attachment 3—Representations about a referral agency response provisions

(page left intentionally blank)

420 Flinders Street, Townsville QLD 4810
PO Box 1090, Townsville QLD 4810
ergon.com.au

24 June 2025

Chief Executive Officer
South Burnett Regional Council

Attention: Vanessa
Via email: info@sbrc.qld.gov.au

cc Parkside Group Pty Ltd
C/- Abisa Town Planning
Attention: Lisa Pienaar
Via email: abisplanning@outlook.com

Dear Sir/Madam,

Ergon Advice Agency Response – Change (Other) to development permit - Material Change of Use for High Impact Industry (briquette facility) and environmentally relevant activity 47, located at 2-30 Kemp Street, Wondai
Council Ref: MCU25/0010
Our Ref: ECM 19632308 - 24999466

This referral agency response is given under section 56 of the *Planning Act 2016*.

Response	
Outcome	Approved in full - subject to conditions
Referral assessment capacity	Advice
Matters referral assessment made against (S55(2))	The purpose of the *Electricity Act 1994* and *Electricity Safety Act* 2002
Reasons for decision (S56(7)(b))	The works do not conflict with: ▪ the objectives set out within Part 2, Section 3 of the Electricity Act 1994 ▪ the purpose of the Electricity Safety Act 2002 as set out within Part 1 Division 2 Section 4 & 5.

Have you seen our fact sheets?
See the 'considerations when developing around electricity infrastructure' section of our website
www.ergon.com.au/referralagency

	The works do not adversely impact on the safe, efficient, and economically viable operation of the supply network.

Development Details	
Applicant	Parkside Group Pty Ltd C/- Abisa Town Planning
Assessment Manager	South Burnett Regional Council
Council Application No.	MCU25/0010
Street Address	2-30 Kemp Street, Wondai
RPD	106SP331010
Development Type	Change (other) to development permit - Material Change of Use for High Impact Industry (briquette facility) and environmentally relevant activity 47
Referral Trigger	☒ Schedule 10, Part 9, Division 2, Table 2, Item 1 (10.9.2.2.1) – Material Change of use of premises within 100m of a substation site or subject to an easement for the benefit of a distribution entity under the Electricity Act and the easement is for a supply network
Impacted Electrical Infrastructure	Easement A SP320016 – 11kV/1000kVA Pad Mount Transformer (ID: SG822765)

Ergon provides the following response to the application in accordance with Section 56(1) of the *Planning Act 2016:*

Component of Development	Advice Agency direction
MCU	☒ S56(1)(a) – no requirements for the application

General Advice:

- Compliance with the Electrical Safety Act 2002, including any Code of Practice under the Act and the Electrical safety Regulation 2013 including any safety exclusion zones defined in the Regulation is mandatory

  Should any doubt exist in maintaining the prescribed clearance to the overhead conductors and electrical infrastructure then the applicant is obliged under the Act to seek advice from Ergon.

- Any costs incurred by Ergon as a result of the works on the easement are to be met by the property Developer / owner.

- This response does not constitute an approval to commence any works within the easement. Consent to commence works relevant to the conditions of the easement is required. All works on easement (including but not limited to earthworks, drainage and detention basins, road construction,

underground and overhead services installation) require detailed submissions, assessment, and consent (or otherwise) by Ergon.

- All works proposed to be undertaken in close proximity to overhead or underground electrical lines are to be undertaken in accordance with Ergon's Works Practice Manual WP1323. This document refers to various standards, guidelines, calculations, legal requirements, technical details, and other information relevant to working near high voltage infrastructure. A copy of WP1323 can be found online via Ergon's document library (Document library | Ergon).

Should you require any further information on the above matter, please contact Tammara Scott on 0492 137 878 or via email at townplanning@ergon.com.au.

Yours faithfully,

Tammara Scott
Town Planner

PROPOSED 2024 SITE DEVELOPMENT
PARKSIDE WONDAI

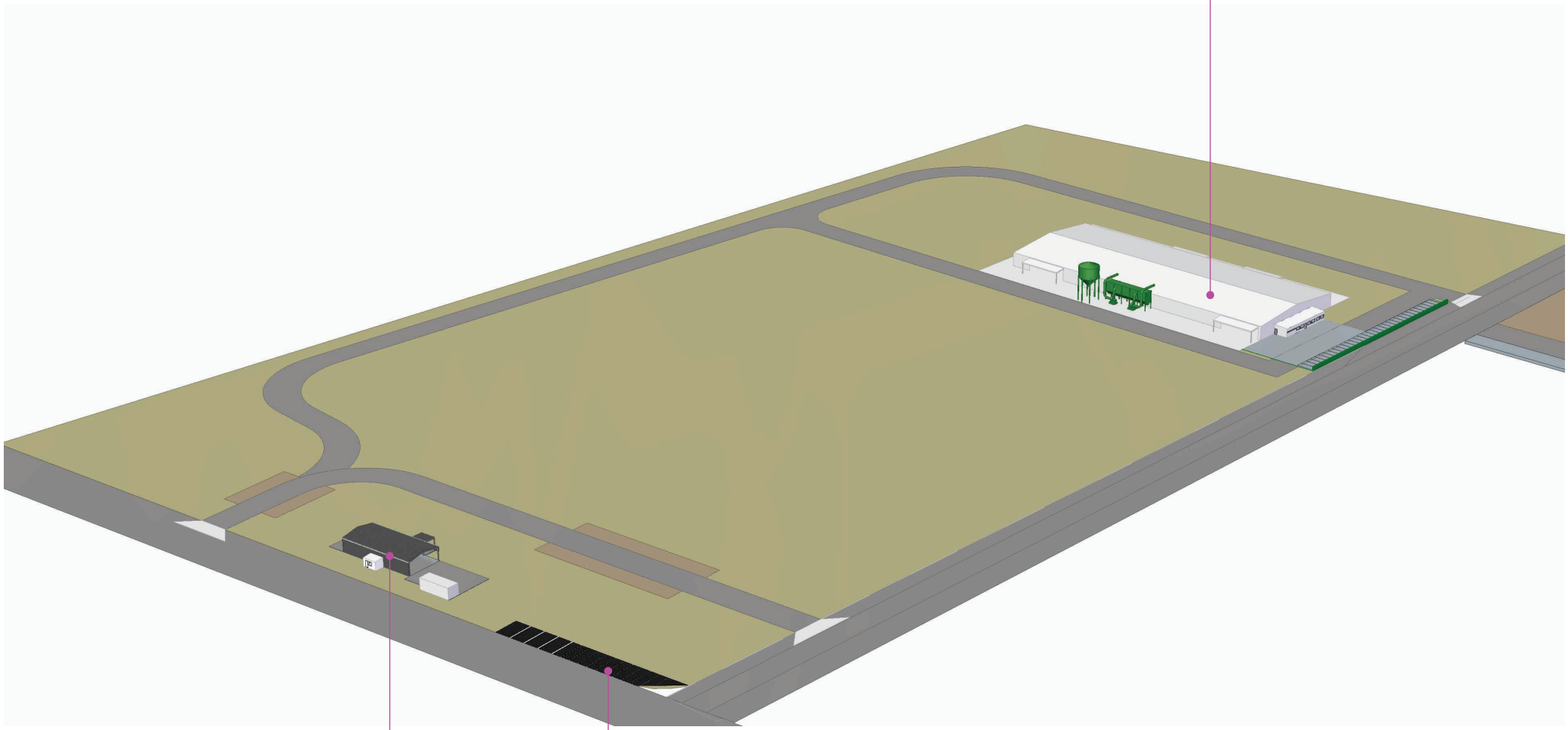

OZ-TAG ENGINEERING
27 Hall Rd, Gympie
5482 7080

The information contained on this drawing sheet should be understood and interpreted in conjunction with all associated drawing sheets and model files.

LATEST REVISION	pract	8/03/2024	
DRAWN	pract	1/03/2024	
CHECKED			
APPROVED			

UNLESS OTHERWISE SPECIFIED DIMENSIONS ARE IN MILLIMETERS & TOLLERANCES ARE
- x 0 PL ± 0.25 (Machined)
- x 0 PL ± 1.5 (Fabricated)
- x 1 PL ± 0.05
- x 2 PL ± 0.005

Angles 0 PL ± 0.25°

A3 | DO NOT SCALE | SHEET 1 OF 9

CLIENT
PARKSIDE WONDAI
Commercial In Confidence.

PROJECT	WONDAI SITE DEVELOPMENT
DETAIL	WONDAI PROPOSED 2024 WORKS
DRG No	OZ-WON-24-03-01
REV	A

EXISTING SITE

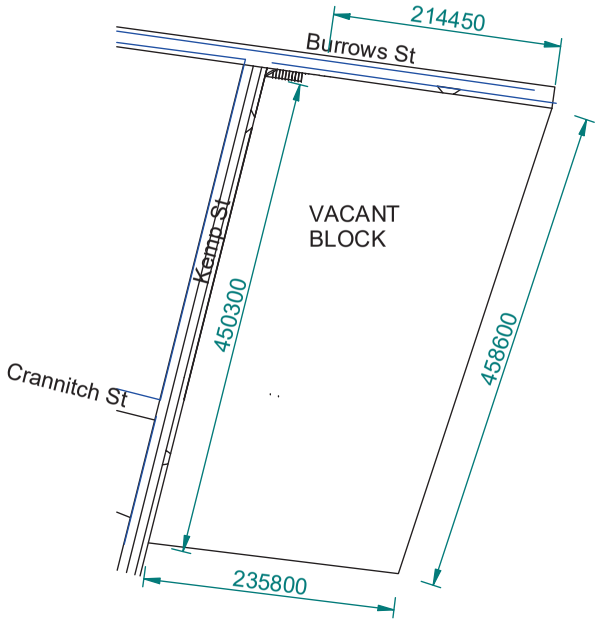

1:5000

2024 PLANNED DEVELOPMENT

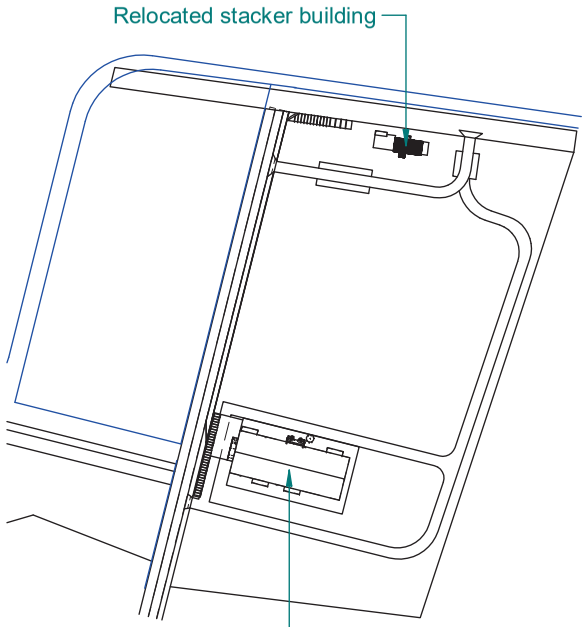

1:5000

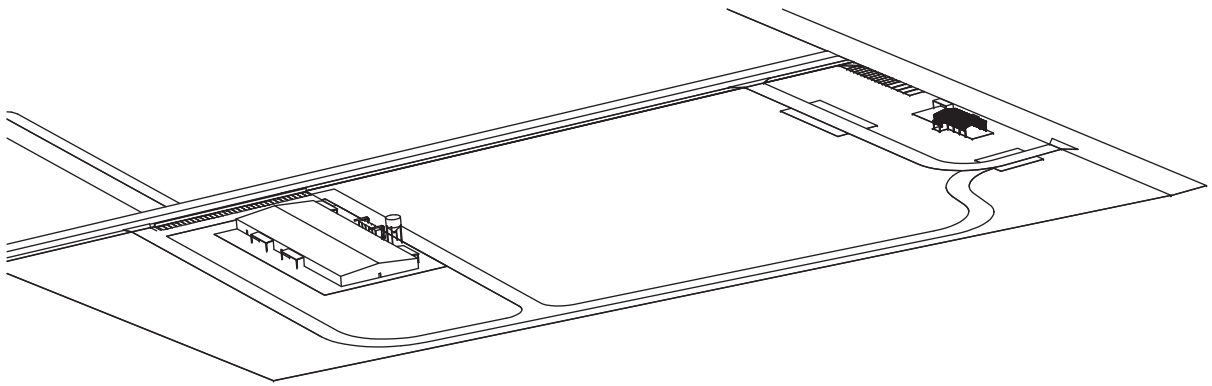

OZ-TAG ENGINEERING 27 Hall Rd, Gympie 5482 7080	LATEST REVISION	pract	8/03/2024
	DRAWN	pract	1/03/2024
	CHECKED		
	APPROVED		

The information contained on this drawing sheet should be understood and interpreted in conjunction with all associated drawing sheets and model files.

UNLESS OTHERWISE SPECIFIED DIMENSIONS ARE IN MILLIMETERS & TOLLERANCES ARE
- 0 PL ± 0.25 (Machined)
- 0 PL ± 1.5 (Fabricated)
- 1 PL ± 0.05
- 2 PL ± 0.005
Angles 0 PL ± 0.25°

A3

DO NOT SCALE

SHEET 2 OF 9

CLIENT

PARKSIDE WONDAI

Commercial In Confidence.

PROJECT	WONDAI SITE DEVELOPMENT
DETAIL	WONDAI PROPOSED 2024 WORKS
DRG No	OZ-WON-24-03-01
REV	A

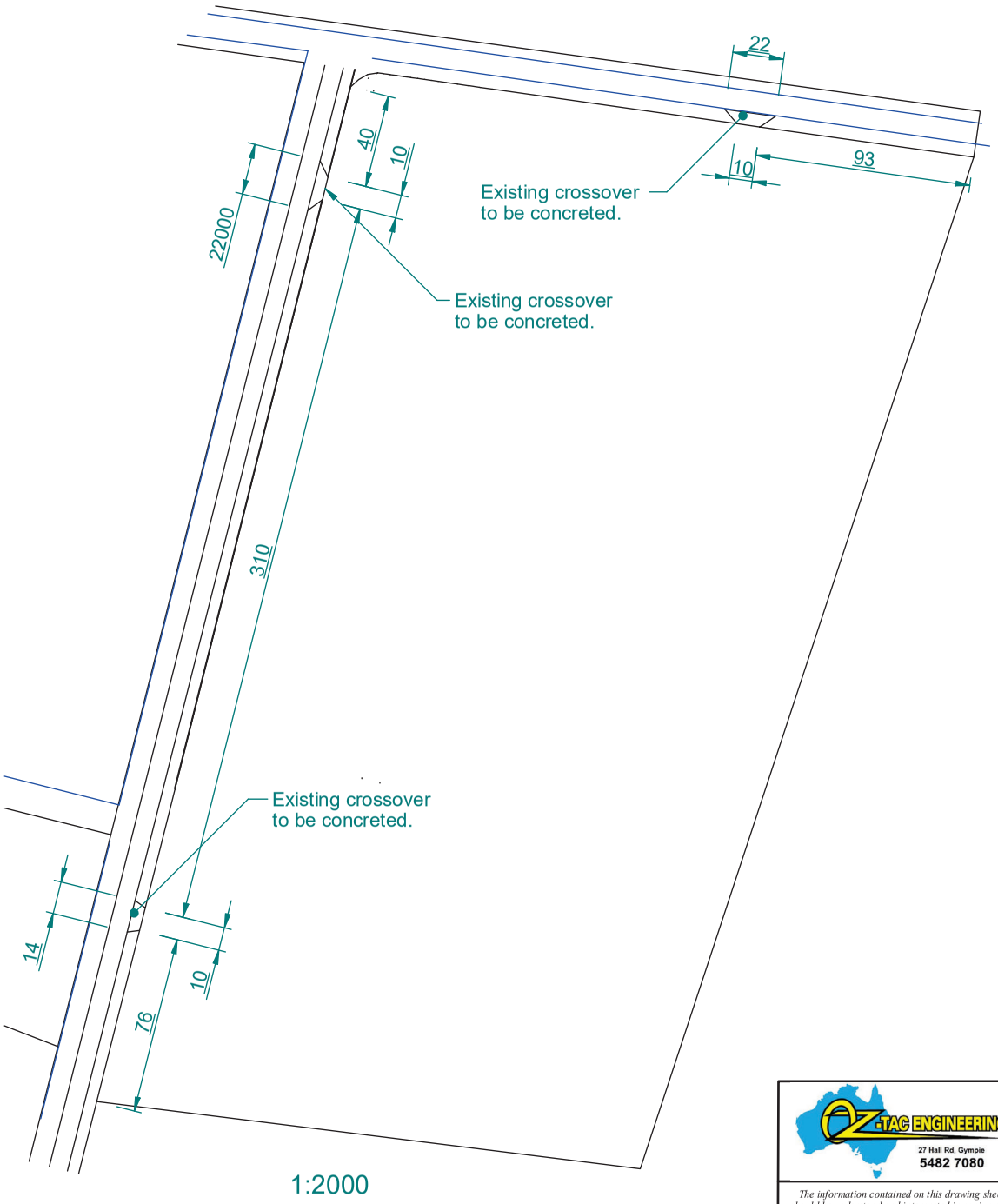

1:2000

SITE CROSSOVERS

Crossovers are to be concreted.

OZ-TAG ENGINEERING 27 Hall Rd, Gympie 5482 7080	LATEST REVISION	pract	8/03/2024
	DRAWN	pract	1/03/2024
	CHECKED		
	APPROVED		
The information contained on this drawing sheet should be understood and interpreted in conjunction with all associated drawing sheets and model files.	UNLESS OTHERWISE SPECIFIED DIMENSIONS ARE IN MILLIMETERS & TOLLERANCES ARE - 0 PL ± 0.25 (Machined) - 0 PL ± 1.5 (Fabricated) - 1 PL ± 0.05 - 2 PL ± 0.005 Angles 0 PL ± 0.25°	A3	DO NOT SCALE SHEET 3 OF 9

CLIENT: **PARKSIDE WONDAI**

Commercial In Confidence.

PROJECT	WONDAI SITE DEVELOPMENT
DETAIL	WONDAI PROPOSED 2024 WORKS
DRG No	OZ-WON-24-03-01
REV	A

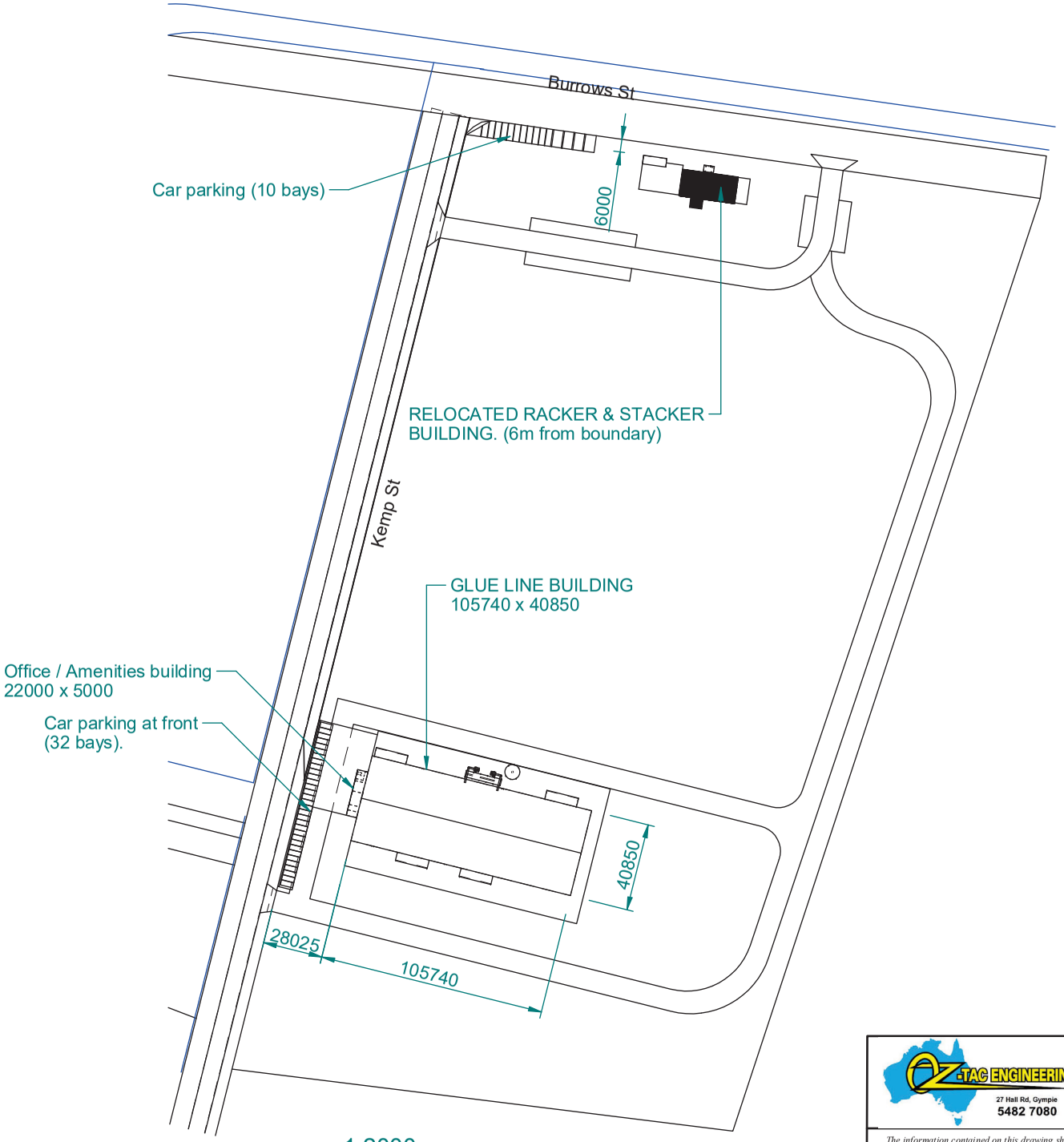

SITE DEVELOPMENT OVERVIEW

RELOCATED RACKER/STACKER.
Approx area 320m2 located on North boundary.
Boundary clearance 6m.
Building construction - steel frame with colourbond trimdeck cladding.
10 carparking bays to be provided.
Existing crossovers on North and West boundarys to be concreted.

Amenities
Prefabricated Atco or similar 4.8m x 3.6m (17.2m2)

NEW GLUE LINE BUILDING.
Approx area 4320m2
Boundary clearance 23m
Building construction - steel frame with colourbond trimdeck cladding.
32 bay carpark to be provided.

Office & Amenities
Steel frame with colourbond trimdeck cladding.
22m x 5m (110m2)

OZ-TAG ENGINEERING
27 Hall Rd, Gympie
5482 7080

The information contained on this drawing sheet should be understood and interpreted in conjunction with all associated drawing sheets and model files.

LATEST REVISION	pract	8/03/2024
DRAWN	pract	1/03/2024
CHECKED		
APPROVED		

UNLESS OTHERWISE SPECIFIED DIMENSIONS ARE IN MILLIMETERS & TOLLERANCES ARE
- 0 PL ± 0.25 (Machined)
- 0 PL ± 1.5 (Fabricated)
- 1 PL ± 0.05
- 2 PL ± 0.005
Angles 0 PL ± 0.25°

DO NOT SCALE
A3
SHEET 4 OF 9

CLIENT
PARKSIDE WONDAI
Commercial In Confidence.

PROJECT	WONDAI SITE DEVELOPMENT
DETAIL	WONDAI PROPOSED 2024 WORKS
DRG No	OZ-WON-24-03-01
REV	A

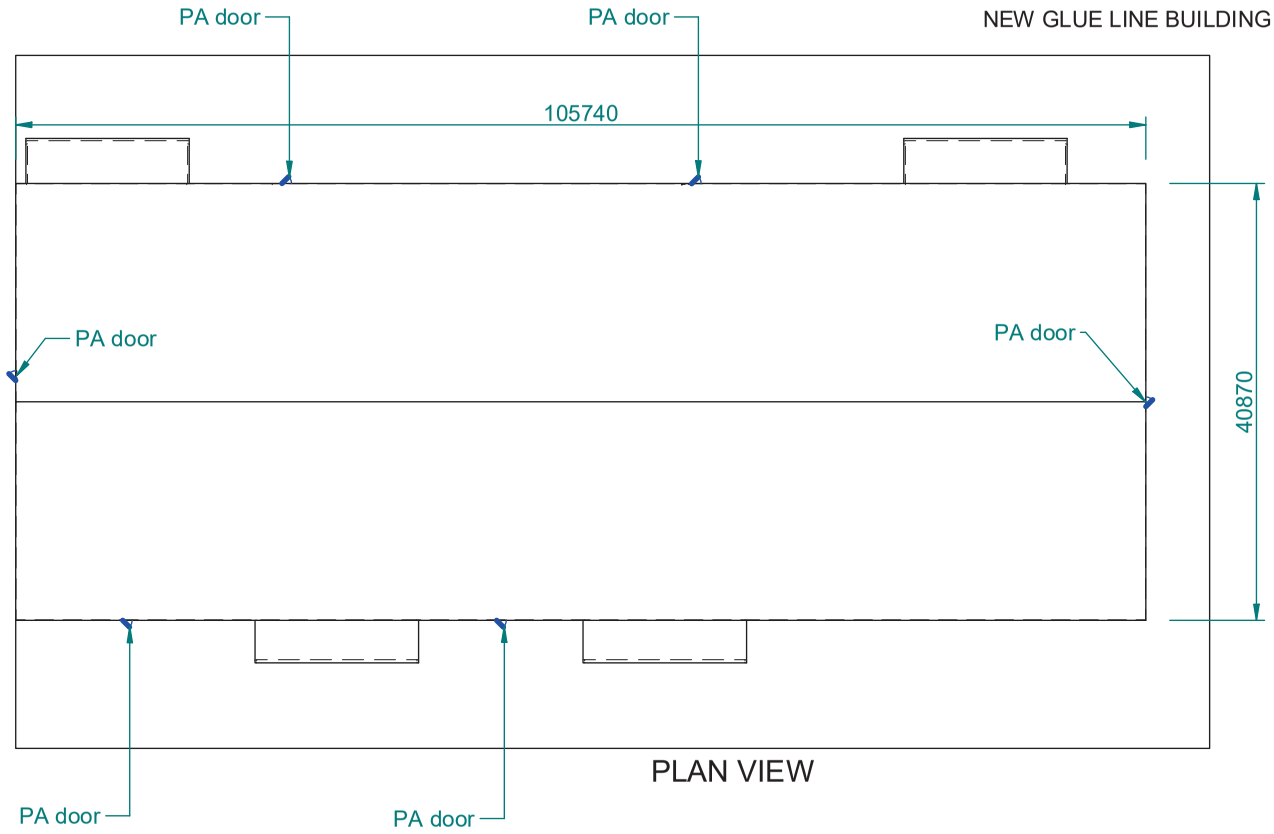

PLAN VIEW

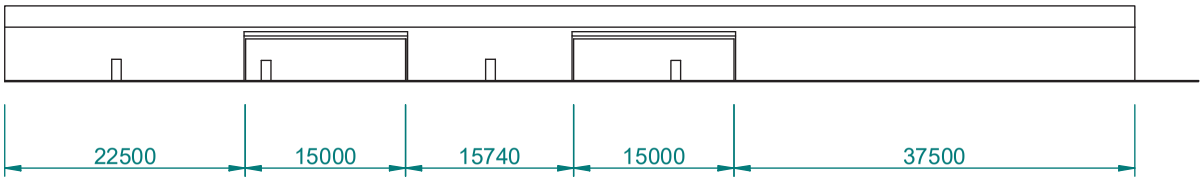

SIDE ELEVATION

NEW GLUE LINE BUILDING.
Approx area 4320m2
Boundary clearance 27m
Building construction - steel frame with colourbond trimdeck cladding.
32 bay carpark to be provided.

Office & Amenities
Boundary clearance 23m
Steel frame with colourbond trimdeck cladding.
22m x 5m (110m2)

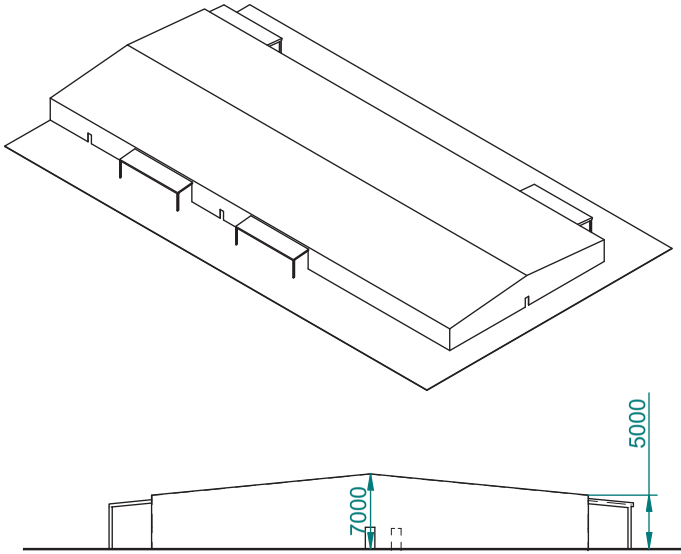

END ELEVATION

OZ-TAG ENGINEERING
27 Hall Rd, Gympie
5482 7080

The information contained on this drawing sheet should be understood and interpreted in conjunction with all associated drawing sheets and model files.

LATEST REVISION	pract	8/03/2024
DRAWN	pract	1/03/2024
CHECKED		
APPROVED		

UNLESS OTHERWISE SPECIFIED DIMENSIONS ARE IN MILLIMETERS & TOLLERANCES ARE
- 0 PL ± 0.25 (Machined)
- 0 PL ± 1.5 (Fabricated)
- 1 PL ± 0.05
- 2 PL ± 0.005
Angles 0 PL ± 0.25°

DO NOT SCALE
A3
SHEET 5 OF 9

CLIENT
PARKSIDE WONDAI
Commercial In Confidence.

PROJECT	WONDAI SITE DEVELOPMENT
DETAIL	WONDAI PROPOSED 2024 WORKS
DRG No	OZ-WON-24-03-01
REV	A

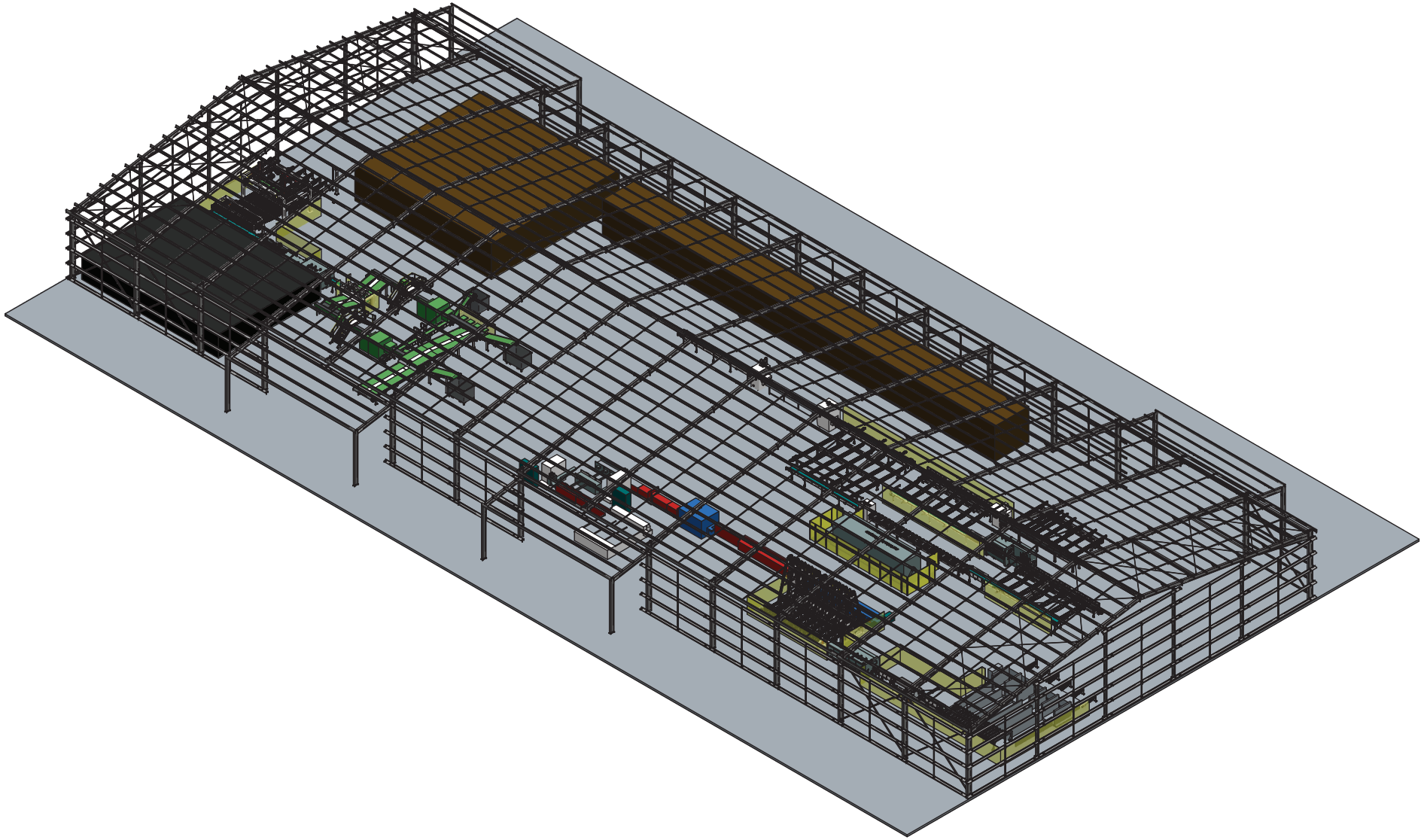

GLUE LINE BUILDING LAYOUT WITH EQUIPMENT
DOCKING LINE
FINGER JOINTING LINE
BEAM LINE
WIP STORAGE

OZ-TAG ENGINEERING
27 Hall Rd, Gympie
5482 7080

The information contained on this drawing sheet should be understood and interpreted in conjunction with all associated drawing sheets and model files.

LATEST REVISION	pract	8/03/2024
DRAWN	pract	1/03/2024
CHECKED		
APPROVED		

UNLESS OTHERWISE SPECIFIED DIMENSIONS ARE IN MILLIMETERS & TOLLERANCES ARE
- 0 PL ± 0.25 (Machined)
- 0 PL ± 1.5 (Fabricated)
- 1 PL ± 0.05
- 2 PL ± 0.005

Angles 0 PL ± 0.25°

DO NOT SCALE

A3

SHEET 6 OF 9

CLIENT

PARKSIDE WONDAI

Commercial In Confidence.

PROJECT	WONDAI SITE DEVELOPMENT
DETAIL	WONDAI PROPOSED 2024 WORKS
DRG No	OZ-WON-24-03-01
REV	A

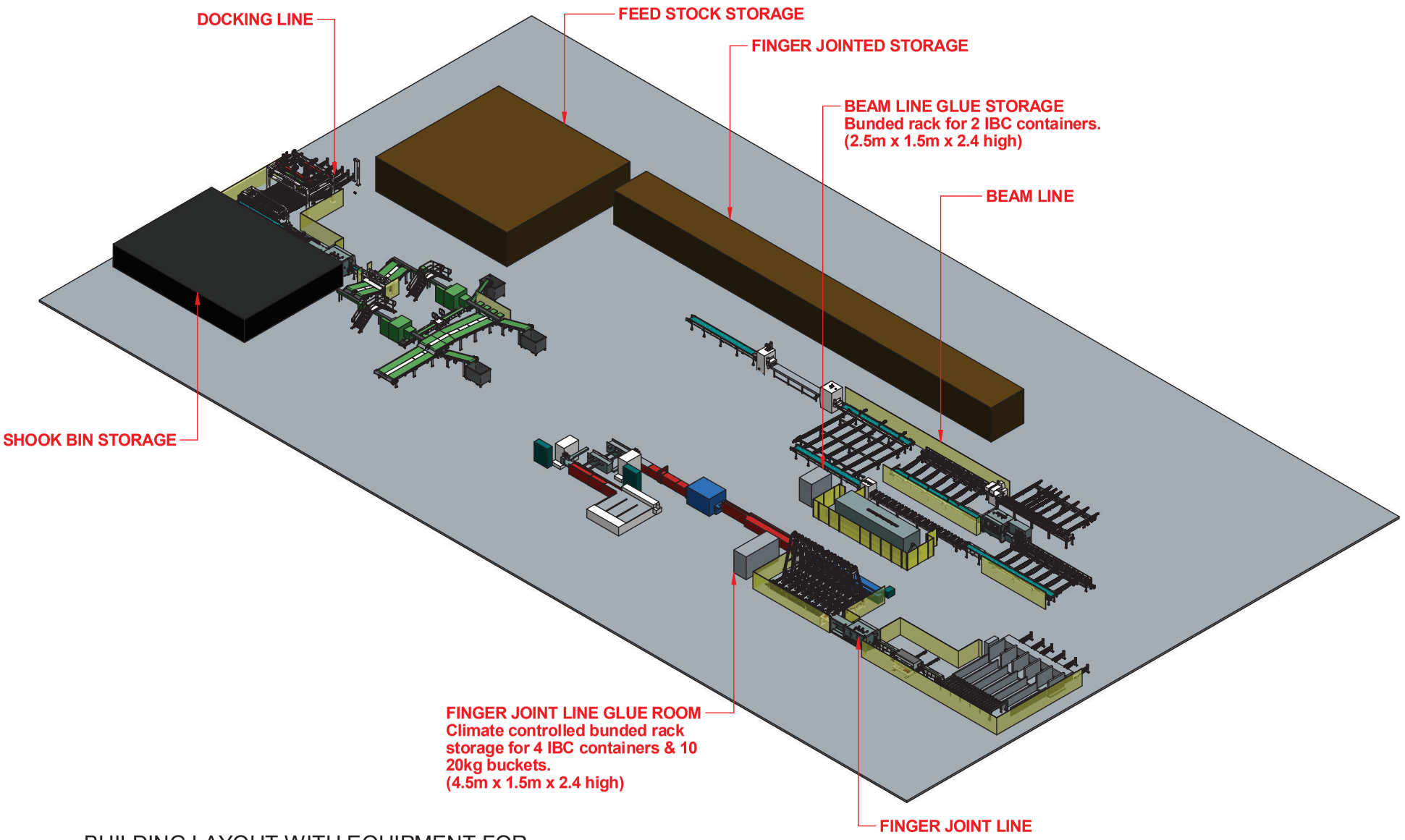

BUILDING LAYOUT WITH EQUIPMENT FOR
DOCKING LINE
FINGER JOINTING LINE
BEAM LINE
WIP STORAGE
GLUE ROOMS

OZ-TAG ENGINEERING
27 Hall Rd, Gympie
5482 7080

The information contained on this drawing sheet should be understood and interpreted in conjunction with all associated drawing sheets and model files.

LATEST REVISION	pract	8/03/2024
DRAWN	pract	1/03/2024
CHECKED		
APPROVED		

UNLESS OTHERWISE SPECIFIED DIMENSIONS ARE IN MILLIMETERS & TOLLERANCES ARE
- 0 PL ± 0.25 (Machined)
- 0 PL ± 1.5 (Fabricated)
- 1 PL ± 0.05
- 2 PL ± 0.005
Angles 0 PL ± 0.25°

A3 | DO NOT SCALE | SHEET 7 OF 9

CLIENT
PARKSIDE WONDAI
Commercial In Confidence.

PROJECT	WONDAI SITE DEVELOPMENT
DETAIL	WONDAI PROPOSED 2024 WORKS
DRG No	OZ-WON-24-03-01
REV	A

RACKER & STACKER BUILDING

Steel frame
Trimdeck / colourbond clading.
Area 320m2 approx

Amenities building.
Atco or similar.
Area 17.2m2

Carpark
10 bays

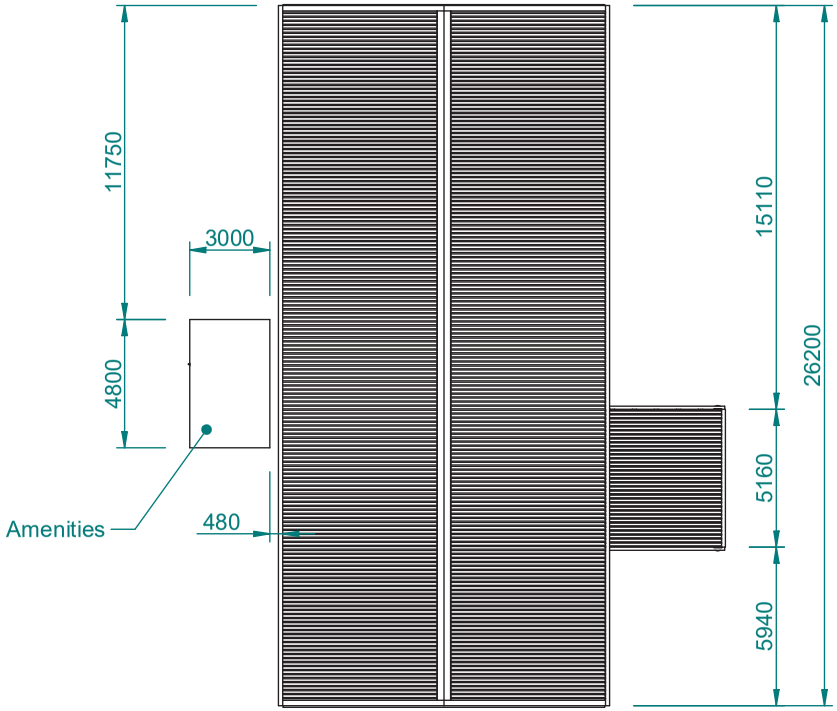

TOP VIEW

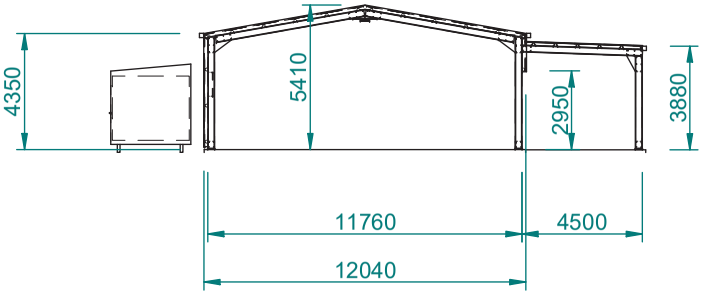

END VIEW

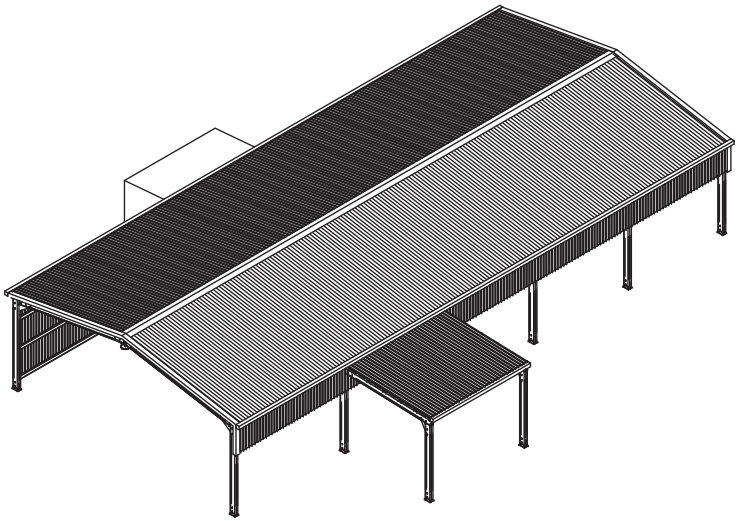

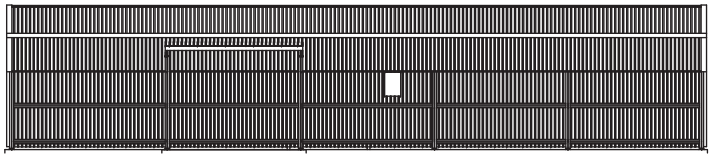

SIDE VIEW

OZ-TAG ENGINEERING 27 Hall Rd, Gympie 5482 7080	LATEST REVISION	pract	8/03/2024
	DRAWN	pract	1/03/2024
	CHECKED		
	APPROVED		
The information contained on this drawing sheet should be understood and interpreted in conjunction with all associated drawing sheets and model files.	UNLESS OTHERWISE SPECIFIED DIMENSIONS ARE IN MILLIMETERS & TOLLERANCES ARE - 0 PL ± 0.25 (Machined) - 0 PL ± 1.5 (Fabricated) - 1 PL ± 0.05 - 2 PL ± 0.005 Angles 0 PL ± 0.25°	A3	DO NOT SCALE SHEET 8 OF 9

CLIENT: **PARKSIDE WONDAI**
Commercial In Confidence.
PROJECT: WONDAI SITE DEVELOPMENT
DETAIL: WONDAI PROPOSED 2024 WORKS
DRG No: OZ-WON-24-03-01 REV: A

GLUE LINE CAR PARK & OFFICE / AMMENITIES

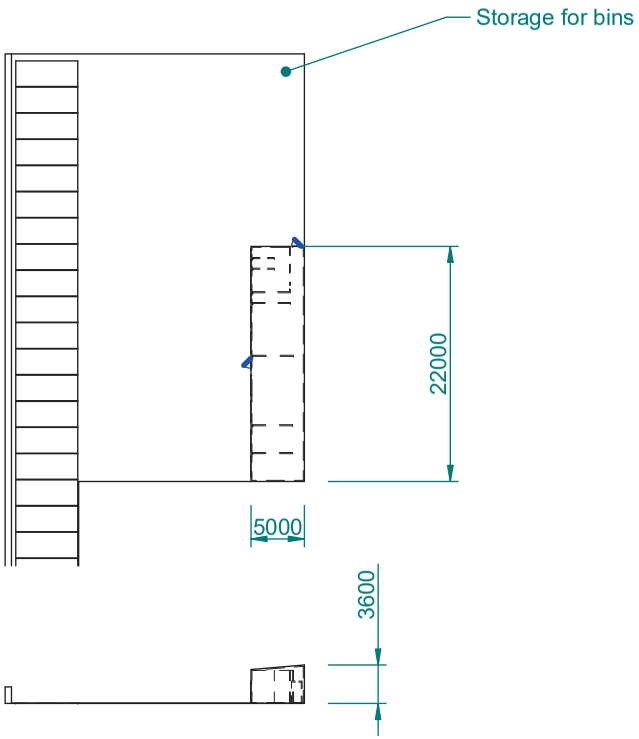

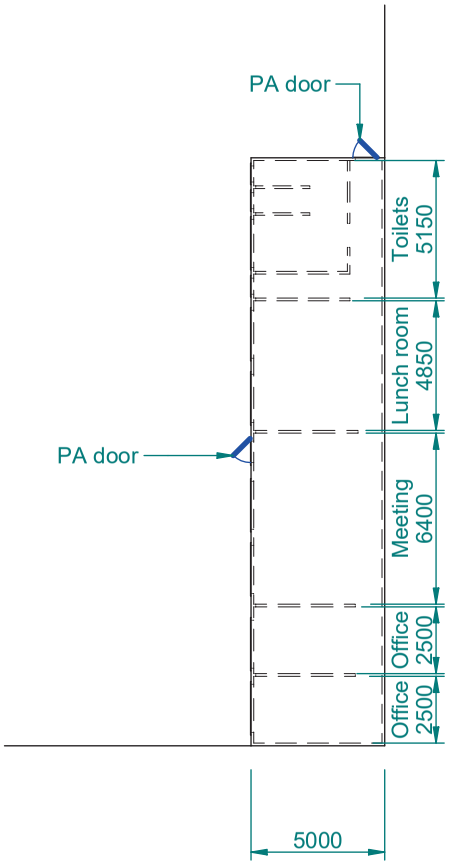

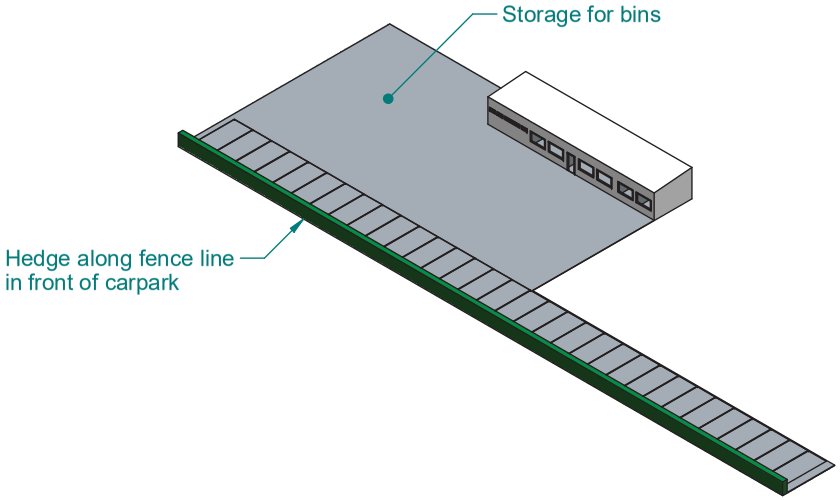

Office amenities building.
Steel frame.
Clad with trimdeck / colourbond.
Area 110m2

Carpark
32 bays
Screened from road with hedge.

OZ-TAG ENGINEERING
27 Hall Rd, Gympie
5482 7080

The information contained on this drawing sheet should be understood and interpreted in conjunction with all associated drawing sheets and model files.

LATEST REVISION	pract	8/03/2024
DRAWN	pract	1/03/2024
CHECKED		
APPROVED		

UNLESS OTHERWISE SPECIFIED DIMENSIONS ARE IN MILLIMETERS & TOLLERANCES ARE
- 0 PL ± 0.25 (Machined)
- 0 PL ± 1.5 (Fabricated)
- 1 PL ± 0.05
- 2 PL ± 0.005
Angles 0 PL ± 0.25°

A3 | DO NOT SCALE | SHEET 9 OF 9

CLIENT
PARKSIDE WONDAI
Commercial In Confidence.

PROJECT	WONDAI SITE DEVELOPMENT
DETAIL	WONDAI PROPOSED 2024 WORKS
DRG No	OZ-WON-24-03-01
REV	A

LOCATION MAP

A	250530	PRELIM ISSUE
B	250707	HYDRANT PUMP SET AND TANK MOVED, ENTRY TO SITE RELOCATED
C	250714	ACCESSIBLE PARKING RELOCATED
D	250717	BRIQUETTE FACTORY LENGTHENED 5M

Proposed Briquette Factory

2-30 Kemp Street WONDAI QLD 4606

for PARKSIDE GROUP - TIMBER DIVISION

NOT FOR CONSTRUCTION

Job No 2025-03

MCU APPLICATION

SITE PLAN

DA01

250717 Rev D

May 2025

SCALE 1:1000 @ A1

0 50 100 150

SWELL ARCHITECTS

A: 12 Balkin Road Eumundi QLD 4562
M: 0414 574 555
E: matt@swellarchitects.com
R: Nominated Architect QLD No 4747

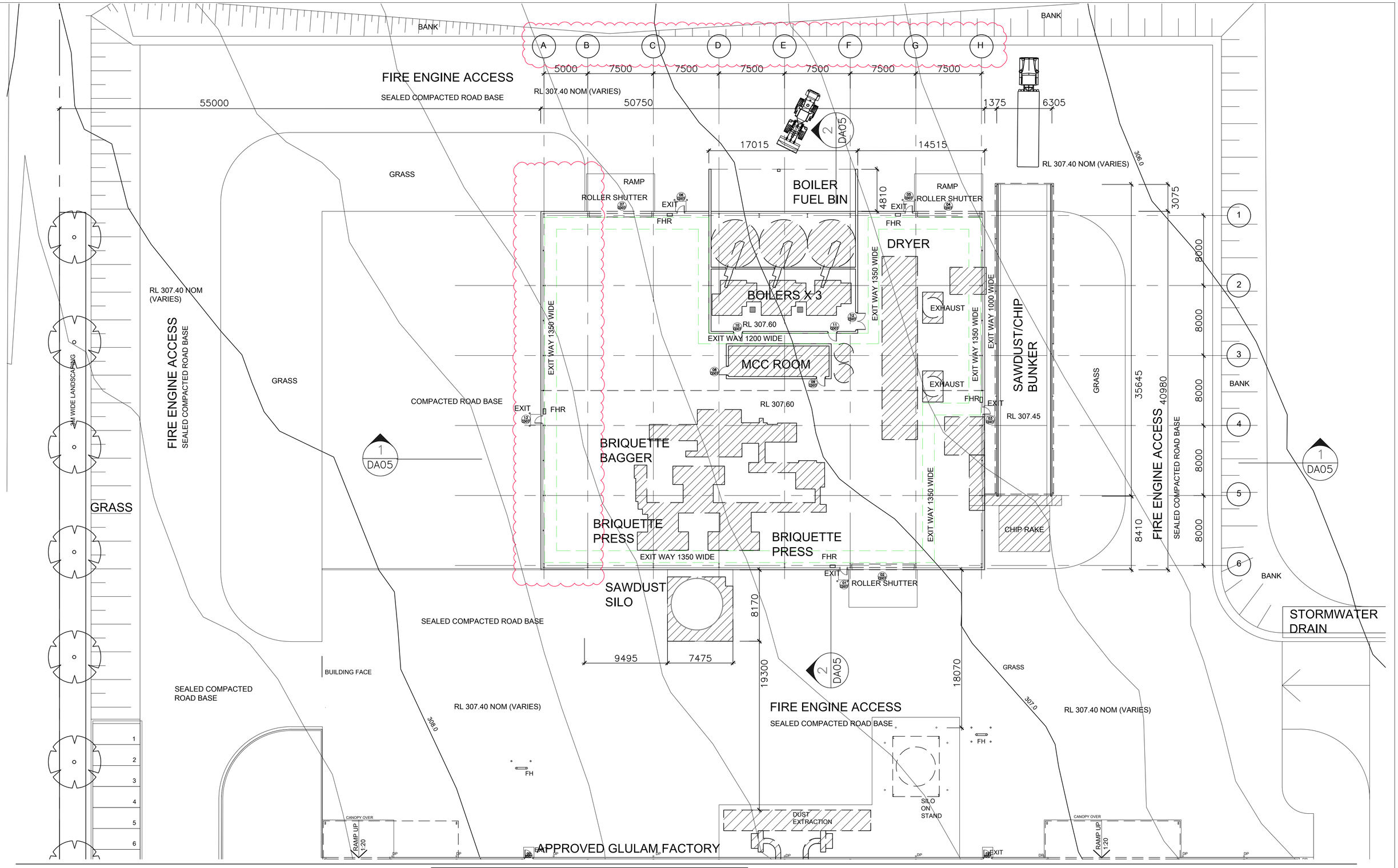

Proposed Briquette Factory

2-30 Kemp Street WONDAI QLD 4606

for PARKSIDE GROUP - TIMBER DIVISION

A	250530	PRELIM ISSUE
B	250707	LEVELS AMENDED, ROLLER SHUTTER AT NW CNR ADDED
C	250717	BUILDING LENGTHENED 5M

NOT FOR CONSTRUCTION

Job No 2025-03

MCU APPLICATION
FACTORY FLOOR PLAN

DA02

250717 Rev C

May 2025

SCALE 1:200 @ A1

SWELL ARCHITECTS

A: 12 Balkin Road Eumundi QLD 4562
M: 0414 574 555
E: matt@swellarchitects.com
R: Nominated Architect QLD No 4747

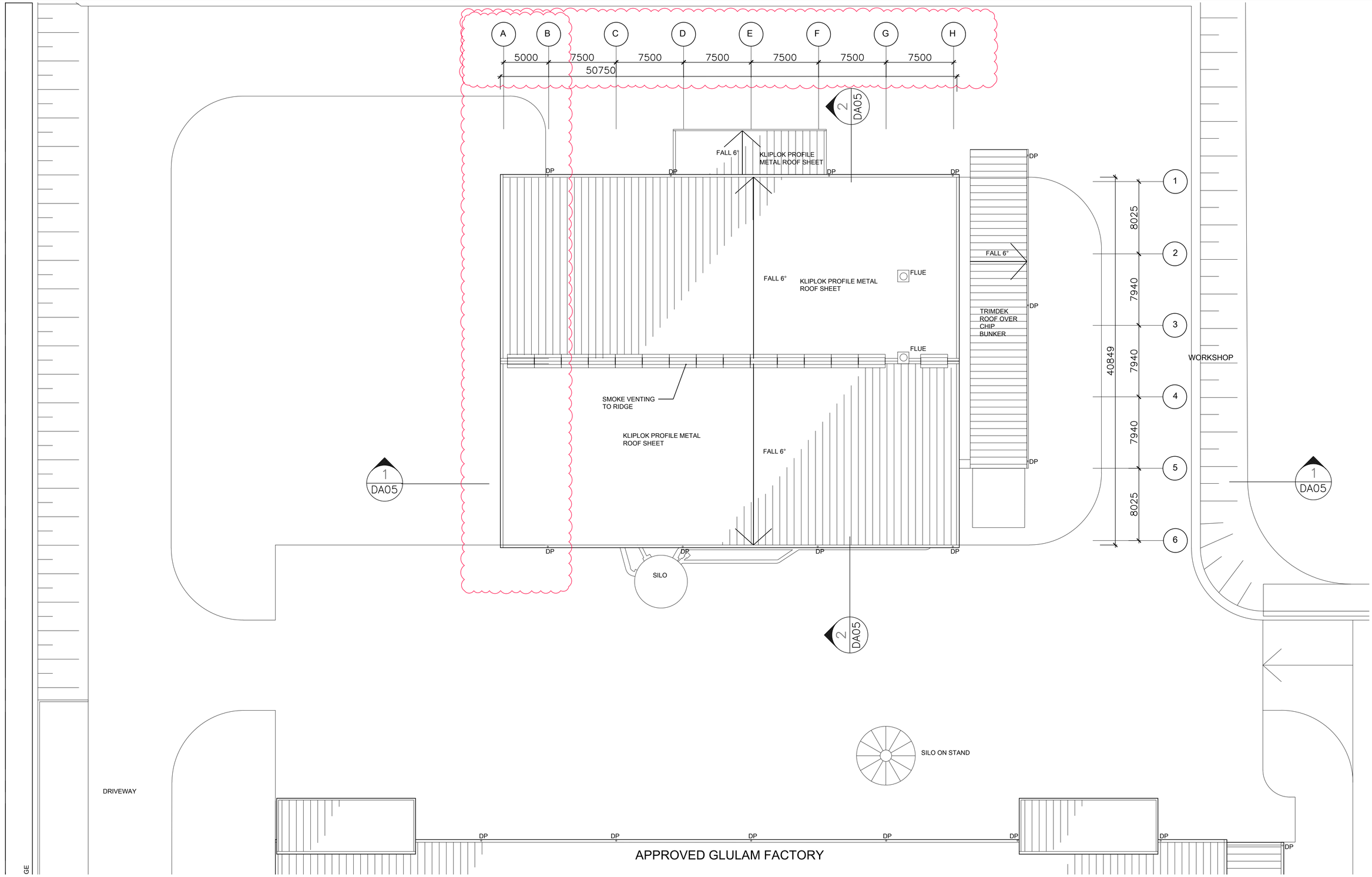

Proposed Briquette Factory

2-30 Kemp Street WONDAI QLD 4606

for PARKSIDE GROUP - TIMBER DIVISION

A	250602	PRELIM ISSUE
B	250707	SMOKE VENT ADDED
B	250717	FACTORY LENGTHENED 5M

NOT FOR CONSTRUCTION

MCU APPLICATION
ROOF PLAN

Job No 2025-03

DA03

250717 Rev C

May 2025

SCALE 1:200 @ A1

SWELL ARCHITECTS

A: 12 Balkin Road Eumundi QLD 4562
M: 0414 574 555
E: matt@swellarchitects.com
R: Nominated Architect QLD No 4747

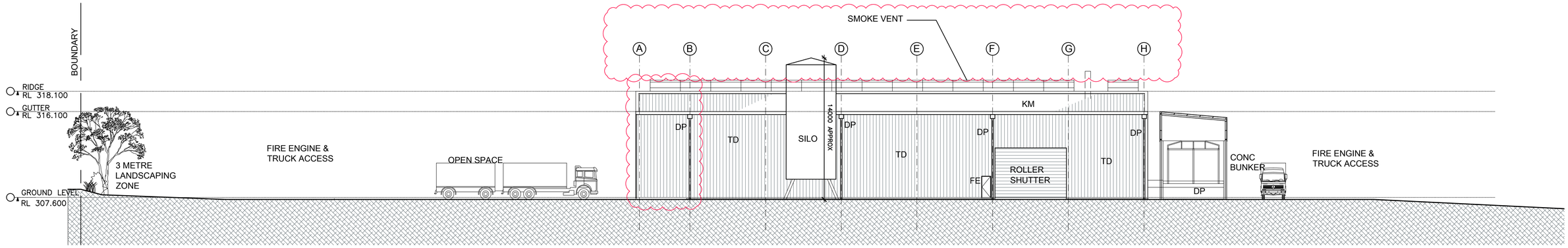

SOUTH ELEVATION

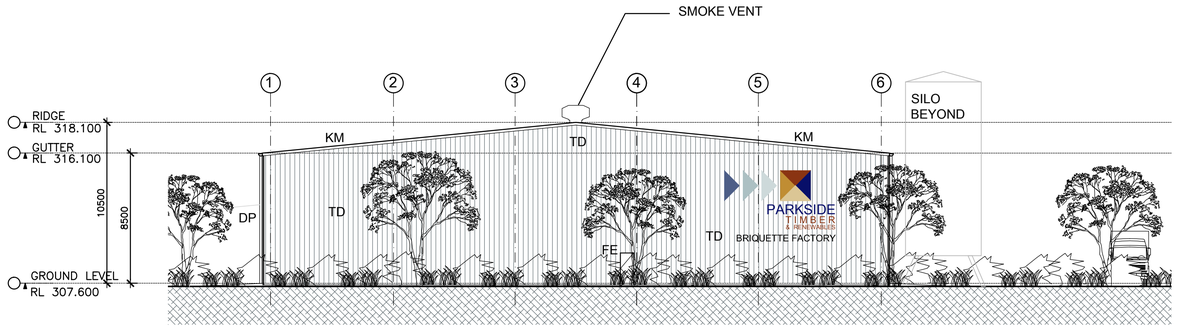

WEST ELEVATION FROM KEMP STREET

NOTE: WESTERN FACADE TO BE ENHANCED WITH POWDERCOAT ALUMINIUM PANELS AND LETTERING TO DEPICT THE PARKSIDE LOGO FOR ITS TIMBER AND RENEWABLES DIVISION

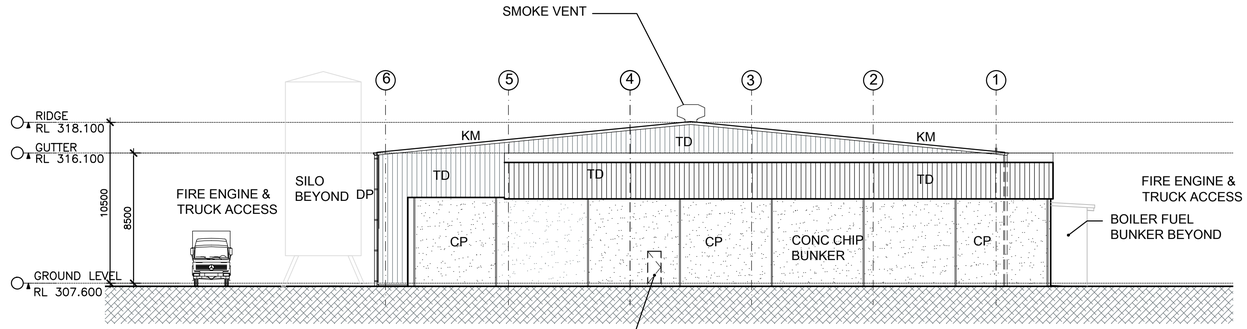

EAST ELEVATION

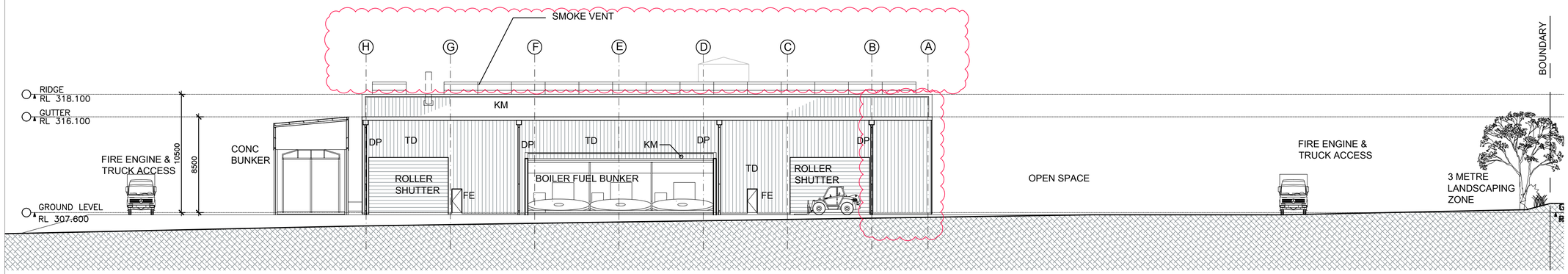

NORTH ELEVATION

MATERIALS LEGEND

TD	COLORBOND TRIMDEK WALL CLADDING
FE	FIRE EXIT DOOR
AW	ALUMINIUM SLIDING WINDOW
TW	TRANSLUCENT WALL SHEETING
FG	FIXED GLAZING
HD	SIDE HUNG GLASS DOOR
KM	COLORBOND KLIPLOK METAL DECK ROOFING
DP	COLORBOND DOWNPIPE (SUMP TO MAIN ROOF)
RS	ROLLER SHUTTER
CP	PRECAST CONCRETE PANEL

Proposed Briquette Factory

2-30 Kemp Street WONDAI QLD 4606

for PARKSIDE GROUP - TIMBER DIVISION

A	250602	PRELIM ISSUE
B	250707	BUILDING AND ROAD LOWERED, ROLLER SHUTTER ADDED TO NORTH ELEVATION, SMOKE VENTS ADDED TO ROOF
C	250717	BUILDING LENGTHENED 5M

NOT FOR CONSTRUCTION

MCU APPLICATION ELEVATIONS

Job No 2025-03

DA04

250717 Rev C

May 2025

0 10 20 30

SCALE 1:200 @ A1

SWELL ARCHITECTS

A: 12 Balkin Road Eumundi QLD 4562
M: 0414 574 555
E: matt@swellarchitects.com
R: Nominated Architect QLD No 4747

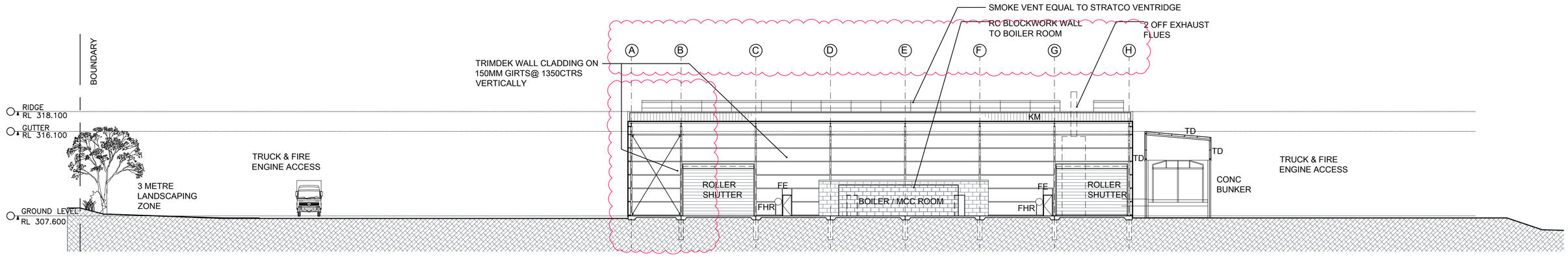

SECTION 1

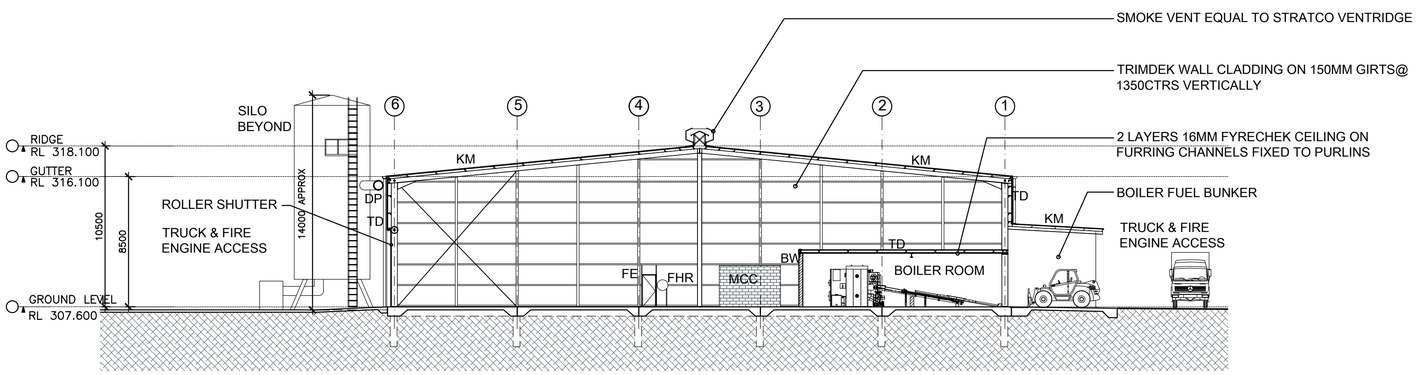

SECTION 2

MATERIALS LEGEND

TD	COLORBOND TRIMDEK WALL CLADDING
FE	FIRE EXIT DOOR
AW	ALUMINIUM SLIDING WINDOW
TW	TRANSLUCENT WALL SHEETING
FG	FIXED GLAZING
HD	SIDE HUNG GLASS DOOR
KM	COLORBOND KLIPLOK METAL DECK ROOFING
DP	COLORBOND DOWNPIPE (SUMP TO MAIN ROOF)
RS	ROLLER SHUTTER
BW	REINFORCED BLOCKWORK

NOTE: EQUIPMENT NOT SHOWN FOR CLARITY

Proposed Briquette Factory

2-30 Kemp Street WONDAI QLD 4606

for PARKSIDE GROUP - TIMBER DIVISION

A	250602	PRELIM ISSUE
B	250707	BUILDING AND ROAD LOWERED,ROLLER SHUTTER ADDED IN SECT 1, SMOKE VENTS ADDED
C	250717	BUILDING LENGTHENED 5M

NOT FOR CONSTRUCTION

MCU APPLICATION SECTIONS

Job No 2025-03

DA05

250717 Rev C

May 2025

0 10 20 30

SCALE 1:200 @ A1

SWELL ARCHITECTS

A: 12 Balkin Road Eumundi QLD 4562
M: 0414 574 555
E: matt@swellarchitects.com
R: Nominated Architect QLD No 4747

Site Based Management Plan

2-30 Kemp Street, Wondai

CLIENT: PARKSIDE BUILDING SUPPLIES PTY. LTD.

PROJECT NO.	**J002200**
STATUS	**FINAL**
DATE	**8/04/2025**
VERSION	**5**

rangeenviro.com.au

Disclaimer

Range Environmental provides this report directly and exclusively to Parkside Building Supplies Pty. Ltd. (the client) for their sole use and solely for the specific purpose for which it is supplied. This report is not to be distributed to any other party without the consent of Range Environmental and Range Environmental will not be liable to any other entity other than the Client in relation to any matters dealt with in this report. Third parties (including, but not limited to, successors or assigns of the Client) may not rely on anything contained in this report whatsoever. The Client indemnifies Range Environmental against any claim, loss, expense, damage or the like arising from any third party which results from the Client providing this report to that third party without the prior knowledge or consent of Range Environmental.

This report has been prepared based on the information, documentation and representations given by the Client to Range Environmental. The Client releases Range Environmental from any claim for damage, cost, loss, expense or the like which is caused or contributed to by the incorrect, inaccurate, false, misleading or deceptive information, documentation or representations given by the Client to Range Environmental. The validity and comprehensiveness of any information given by the Client has not been independently verified by Range Environmental and, for the purposes of this report, it is assumed that the information provided to Range Environmental is both complete and accurate.

Where site inspections, testing, surveying or fieldwork have taken place, this report is based on the site conditions and information made available by the Client or their agents or nominees during the visit, the visual observations and any subsequent discussions with regulatory authorities. It is further assumed that normal activities were being undertaken at the site on the day of the site visit(s), unless explicitly stated otherwise.

The Client acknowledges that this Report and all information and content in it shall at all times be and remain the property of Range Environmental and must not be disclosed to any third party at any time, except with the prior consent of Range Environmental or where the Client is required by statute, rule, regulation, judicial process or in connection with any litigation to which it is a party.

Document Control

Version	Purpose	Lead Author	Reviewer	Approved by	Date
1.	Final Report (original project: J001401)	MJW	RJM	LMT	29/09/2023
2.	Final Report – town planner comments (J001401)	MJW	RJM	RJM	5/10/2023
3.	Final Report – RFI response (J001744)	MJW	RJM	RJM	21/02/2024
4.	Final Report – ERA 47 (b) EA Amendment Application	MJW	RJM	RJM	7/04/2025
5.	Final Report – updated site plans	MJW	RJM	RJM	8/04/2025

Table of Contents

1 Overview 6
1.1 Purpose of this SBMP 6
1.2 Scope 6
1.3 SBMP Objectives 6
2 Description of Operations and Maintenance 8
2.1 Maintenance 12
3 Environmental Values, Potential Impacts and Mitigation Measures 13
3.1 Environmental Values 13
3.2 Potential Impacts and Mitigation Measures 13
4 Environmental Management 26
4.1 Management Commitment 26
4.2 Environmental Management Responsibilities 26
4.3 Environmental Control Plans 28
5 Rehabilitation Plan 38
6 Complaint Management 39
7 Environmental Hazards, Incidents & Emergencies 41
7.1 Categories of Environmental Harm 41
7.2 Environmental Hazards and Incidents 41
7.3 External Reporting of Material or Serious Environmental Harm 42
8 Emergency Preparation and Response 44
8.1 Fire 44
8.2 Flooding or Heavy Rain 44
8.3 Spill Response 44
9 Inspections & Monitoring 46
9.1 Site Inspections 46
9.2 Environmental Monitoring 46
10 Training and Communication 47
10.1 Environmental Awareness Training 47
10.2 Internal Communication of Environmental Information 47
10.3 Communication with Regulatory Authorities 47
11 Records Management 48

12 Review and Improvement 49
12.1 Non-conformances & Corrective Actions 49
12.2 Environmental Management Performance Reviews 49
12.3 SBMP Review and Update 49

Tables

Table 1 Scope and application of this SBMP 6
Table 2 Site Operations 8
Table 3 Environmental values 13
Table 4 Potential impacts and mitigation measures 15
Table 5 Roles and responsibilities 27
Table 6 Categories of environmental harm 41
Table 7 External reporting of material or serious environmental harm 42
Table 8 DETSI contact details 43

Figures

Figure 1 Site Locality 7
Figure 2 Sensitive Receptors 14
Figure 3 Complaint Management Procedure 40
Figure 4 Spill Response Procedure 45

Appendices

Appendix A Development Plans and Production Line Machinery Layouts 51
Appendix B Woodchip Boiler Specifications 52
Appendix C Hazardous Chemical Technical & Safety Data Sheets 53
Appendix D Complaint Log 54

1 Overview

1.1 Purpose of this SBMP

This Site Based Management Plan (SBMP) was prepared for Parkside Building Supplies Pty. Ltd to provide an environmental management framework for the proposed expansion of an existing timber and laminated product fabrication facility at 2-30 Kemp Street, Wondai (hereafter 'the site'). The site is formally described as Lot 106 SP331010 (Figure 1) and is located in the South Burnett Regional Council (SBRC).

This SBMP was prepared to support an Environmental Authority (EA) amendment application of the site's existing EA (Reference: P-EA-100669267) and an Other Change to a Development Permit for Material Change of Use (MCU23/0025) for High Impact Industry for a proposed Briquette Plant at the site. This activity constitutes Environmentally Relevant Activity (ERA) 47 (b) Timber milling and woodchipping – milling, in a year, more than 10,000t but not more than 20,000t of timber.

The existing EA authorises ERA 48 (1)(a) Timber and laminated product fabrication – manufacturing, in a year, 5000t to 10,000t of reconstituted timber products for the operation of a Glue-lam facility (wooden and laminated product manufacturing).

A copy of the SBMP shall be kept on site at all times. The scope and application of this SBMP is provided in Table 1 below. A copy of the SBMP shall be provided to regulatory authorities upon request and in the requested format.

1.2 Scope

The scope and application of this SBMP is provided in Table 1.

Table 1 Scope and application of this SBMP

Question	Answer
Who?	This SBMP applies to all personnel (staff, inspectors, sub-contractors, site visitors and other personnel) at the site under the control of Parkside Building Supplies Pty. Ltd.
What?	This SBMP applies to all environmental aspects of operational and maintenance activities at the site.
When?	This SBMP applies during the operations phase of the site.
Where?	This SBMP applies to the site located at 2-30 Kemp Street, Wondai. The site is formally described as Lot 106 SP331010.
Why?	The purpose of this SBMP is to minimise the risk of environmental harm and to satisfy legal and other obligations for environmental protection.

1.3 SBMP Objectives

The objectives of this SBMP are to:

- Describe the site and operations.
- Provide site-specific control measures to minimise the risk of adverse environmental impact during operational activities.
- Define roles, responsibilities, and timing for the implementation of environmental control measures.
- Provide mechanisms for incident management and monitoring, review, and continual improvement of environmental performance at the site.

Figure 1
Site locality

Project: Site Based Management Plan

Client: Parkside Building Supplies Pty. Ltd.

Project No.: J002200

Compiled by: MJW Date: 13/02/2025
Approved by: RJM Date: 13/02/2025

Metres
0 100 200

Legend

- Cadastre
- Roads
- Site Boundary

The content of this document includes third party data. Range Environmental Consultants does not guarantee the accuracy of such data.

Source: Cadastral data sourced from DNRME (2025). Aerial imagery sourced from NearMap (2024).

N

range environmental consultants

2 Description of Operations and Maintenance

An overview of the site's operations is provided at Table 2. Development plans are provided at Appendix A.

Table 2 Site Operations

Aspect of Operations	Description
Facility Operator	• Parkside Building Supplies Pty. Ltd.
Registered Suitable Operator (RSO) Number	• RSO534587
Site	• Lot 106 SP331010
Environmentally Relevant Activities (ERA)	• Existing EA (Reference: P-EA-100669267): ERA 48 (1)(a) Timber and laminated product fabrication – manufacturing, in a year, 5000t to 10,000t of reconstituted timber products. • Proposed under this EA Amendment application: ERA 47 (b) Timber milling and woodchipping – milling, in a year, more than 10,000t but not more than 20,000t of timber.

Annual Throughputs	**Existing**
	• Approximately 6000 tonnes of timber will be processed per annum at maximum capacity (considered to be achieved five (5) years after start-up).
	• Product output will be 30% less than the materials processed per annum (approximately 4200 tonnes) due to processing wastage.
	Proposed
	• The proposed Briquette Plant will receive and process approximately 12,000t of woodchip per year to produce an output of approximately 6,000t of briquette per year.
	• The difference between the tonnage of input and output is due to:
	  • 1300t of the woodchip being used to power the onsite boilers.
	  • The difference in weight of the woodchip compared to the briquettes, and wastage (i.e., briquettes that do not meet the required standards), which is approximately 4700t/year.

Site's Use & Operational Activities	**Existing**
	The existing glue lines building is used to undertake the following operations:
	• *Corymbia citriodora* (Spotted Gum) is delivered to the site via forklift from Parkside Building Supplies' existing operations at the Wondai Dry Mill located at 2-4 & 20 North Street, Wondai (Lot 17 SP118162 and Lot 10 RP819308) for processing.
	• Materials are then finger-jointed (FJ) into either glued laminated timber (Glulam) or deck blanks of varying lengths. All finger jointing activities are completed using polyurethane adhesive.
	• Finger jointed blanks for decking are transported to the existing Wondai Dry Mill via forklift for final machining and oiling.
	• Glulam production is undertaken at the proposed facility, which includes:
	  • FJ deck blanks are planed to 18-19mm laminates.
	  • The laminates are sanded on both faces to ensure positive adhesion.

- The laminates are then placed through the glue applicator (using PA3 Resorcinol adhesive) and then laid in the rotary press for high pressure clamping to complete the face bond.
- Bonded posts and beams are then put through a large planer to complete the profiling process.
- The posts and beams are then docked to length on a large docking machine.
- The posts and beams are then packed, wrapped, and stored within the glue lines building until being transported via forklift to the existing Wondai Dry Mill for despatch.

Note: once the site reaches production capacity, skip dressing (where the product is machined to 22mm thick and graded for Glulam, FJ Deck, or feature grade flooring) is proposed to be undertaken at the site rather than the existing Wondai Dry Mill.

External to the proposed glue lines building, the remainder of the site is used for storage purposes, including the relocated racker & stacker building and designated gravel areas (proximate to the racker & stacker building) which is used for the laydown of timber for drying.

Proposed

Delivery and Storage

- Untreated woodchip[1] will be delivered from Parkside Building Supplies' existing sawmill via trucks and stored in the designated concrete sawdust/chip bunker which will have a top loading feed system.
- The total capacity of the sawdust/chip bunker is 500m^3. Although woodchip will be delivered to the site at regular intervals to ensure the bunker is never empty, the total storage capacity of the bunker is unlikely to be reached during operations.
- Processing of the woodchip through the proposed Briquette Plant will be at a rate of 16m^3/h. Therefore, the maximum time that woodchip would be stored in the designated bunker before being processed is approximately four (4) days.

Initial Processing

- The untreated woodchip will then be fed via a belt conveyor through a magnetic separator (to separate out any steel objects) and into a hammer mill to breakdown the woodchip into 15x15mm chips.
  - The hammer mill will include a star screener which will separate out any oversize woodchips following breakdown which will be collected for reprocessing in the hammer mill as required (i.e., no waste woodchip will be generated). The dominant noise source will be the hammer mill, which will be attenuated by approximately 15 dB by a cabin.

Drying Process

- The woodchip will then be pneumatically sucked from the exit of the hammer mill into a cyclone, dispatched via a rotary valve and then directed via an auger to a belt drier to dry the chip. The belt drier will suck hot air (via

[1] The untreated woodchip that will be received at the site is defined as a product and not a 'waste' as it does not meet the definition of a waste under the *Waste Reduction and Recycling Act 2011*. Therefore, ERAs relating to waste management are not applicable.

	a water to air heat exchanger produced by a boiler) over the surface of the woodchip using large fans. • The boilers will be powered using part of the woodchip received at the site that has been blended with green sawdust. Approximately 1300 tonnes of the woodchip/sawdust will be required to power the boilers per annum. The boilers will generate approximately 13 tonnes of waste ash per year. <u>Storage and Ripening</u> • The dried woodchip will then be transferred via pneumatic suction into a storage silo to "ripen" or achieve homogeneity for moisture content. The silo will also provide dust suction and collection to mitigate potential fugitive dust emissions created during the production of the briquettes. <u>Briquette Production</u> • The woodchip will then be directed via auger into a briquette press which will apply high pressure and the use of moulds to form the briquettes (150mm x 60mm x 90mm). <u>Packaging</u> • The briquettes will then be directed onto the packaging line where they will be measured and packaged on pallets that will be wrapped using an automatic wrapping machine. • Any "ejected" briquettes that do not meet the required length or height will be bagged and reprocessed back through the hammer mill. Reprocessing of "ejected" briquettes will be infrequent due to the accuracy of the moulds used during briquette production.
Plant, Equipment, and Hazardous Chemicals	**Existing** The site includes the following infrastructure (Appendix A): • Glue lines building with office space. • Relocated racker & stacker building. • 42 carparking spaces and new driveway access across the site. The process plant and equipment and its proposed layout within the proposed glue lines building is provided at Appendix A. The following chemicals are stored and used on site: • Two (2) x 1000kg IBCs of Jowat PA3 Resorcinol adhesive (950.82) – classified as Dangerous Goods Class 3 under the Australian Dangerous Goods (ADG) Code. • Two (2) x 1000kg IBCs of Jowat Liquid Hardener (950.86) – not classified as a Dangerous Good under the ADG Code. • Three (3) x 10kg drums of Jowat (402.30) – not classified as a Dangerous Good under the ADG Code. • Two (2) x 1000kg IBCs of Jowapur one-component polyurethane adhesive (681.10) – not classified as a Dangerous Good under the ADG Code. • Three (3) x 20kg drums of Jowat separating agent (901.10) – not classified as a Dangerous Good under the ADG Code. • Three (3) x 20kg drums of Jowat (901.20) – classified as Dangerous Goods Class 9 under the ADG Code. Drums and IBCs are stored in the glue-room inside the glue lines building which shall be bunded and climate controlled as per the product specifications. No fuel or oil storage is proposed at the site as all refuelling of plant and equipment shall be undertaken in the designated fuelling area at the existing Wondai Dry Mill.

	Proposed The following plant and equipment will be utilised for the proposed Briquette Plant operations (Appendix A): • Top loader fuel (woodchip) storage and dispatch system. • Star screener. • Magnetic separator. • Hammer mill. • Belt drier. • Two (2) briquette press machines and one (1) pellet press. • Auto packaging line. • Two (2) x 120m^3 storage silos. • Three (3) x boilers and boiler fuel (woodchip) bin. Note – there will be no storage or use of chemicals at the proposed Briquette Plant.
Staffing	The site (including both the approved and proposed facilities) will operate with 11 full-time employees (including management, supervisors, administration, and machine operators).
Traffic	The traffic generated from the operation of both the approved and proposed facilities at the site is expected to include: • 11 staff vehicles per day. • Three (3) semi-trailers every 2-3 days.
Hours of Operation	**Existing** • The site is proposed to operate from 7:00am to 3:30pm, Monday to Friday (excluding Public Holidays). **Proposed** • The proposed Briquette Plant will be operational from 7:00am to 5:00pm, Monday to Friday (excluding public holidays). The proposed Briquette Plant will not operate on weekends. • The proposed boilers will be required to operate 24/7 as they cannot be turned off due to efficiency reasons.
Wastes	The existing and proposed waste streams generated at the site are summarised below: • Wastewater from staff amenities shall be discharged to the sewer mains system. • One (1) x 2m^3 bulk bin shall be used to store offcuts (defected wood). Offcuts shall be ground and sent via the extraction system to a hopper. • Wood shavings shall be discharged via the dust extraction system to a hopper. Corbetts Organics will remove the wood shavings from the site via a semi-trailer every 2-3 days. • Regulated waste from maintenance activities may include waste oils and oil contaminated consumables such as oil filters, rags, etc. These shall be stored indoors and removed from site by a licensed Regulated Waste contractor. • The boilers will generate approximately 13 tonnes of ash per year that will be collected in containers attached to each boiler (Appendix B) and shall be collected by a regulated waste contractor as required.

	• General and recyclable wastes from staff amenities shall be stored in covered bins and removed regularly from the site for disposal or recycling.
Key Mitigation Controls	The key mitigation controls to manage wastes and emissions from the site's operations are outlined at Section 4.3.

2.1 Maintenance

To ensure optimum performance of critical equipment in mitigating the environmental impacts of the site's operations, routine inspection and maintenance activities shall be scheduled and implemented.

Maintenance programs and schedules shall be developed for the site in accordance with legislative requirements and manufacturer's specifications. The purpose of site maintenance is to minimise the risk of equipment failure that could result in injury to people, impacts to site operations and service delivery and/or adverse environmental impacts. Maintenance records shall be retained as per Section 11.

3 Environmental Values, Potential Impacts and Mitigation Measures

3.1 Environmental Values

The relevant environmental values of the site and local area with regards to the site's operations are described in Table 3.

Table 3 Environmental values

Environmental value	Description
Surface water	The local area drains to the east towards Dingo Creek located approximately 150 m east of the site. Dingo Creek flows to the north-east where it enters Yellow Waterhole Creek. Yellow Waterhole Creek flows to the north to Barambah Creek.
Groundwater	The bore logs for registered bores within a nominal 1 km buffer of the site were reviewed. The shallowest aquifer recorded in the area was a clay aquifer 33.5 m below ground level in the Maronghi Creek Beds.
Soil	Native soils of the region are broadly described by the Bureau of Rural Sciences (2009) as hard pedal mottled-yellow duplex soils.
Amenity (air, noise, and light)	Ambient air quality, light and noise levels of the local area are expected to reflect the influence of nearby roads and surrounding industrial operations. Rural residences occur west of the site in the broader landscape. All noise and air quality sensitive receptors within a nominal 500 m of the site are shown in Figure 2.

3.2 Potential Impacts and Mitigation Measures

Potential impacts to environmental values and key mitigation measures are outlined in Table 4 below. Reference should be made to the Environmental Control Plans (ECPs) provided at Section 4.3 for full details of mitigation measures.

Figure 2 Sensitive receptors

Project: Site Based Management Plan

Client: Parkside Building Supplies Pty. Ltd.

Project No.: J002200

Compiled by: MJW Date: 7/04/2025
Approved by: RJM Date: 7/04/2025

Metres
0 100 200

Legend

- Cadastre
- Roads
- Site Boundary
- Nominal 500m buffer
- Proposed briquette facility

Sensitive receptors

- Air receptor only
- Noise and air receptor

The content of this document includes third party data. Range Environmental Consultants does not guarantee the accuracy of such data.

Source: Cadastral data sourced from DNRME (2025). Aerial imagery sourced from NearMap (2024).

N

range environmental consultants

Table 4 Potential impacts and mitigation measures

Environmental Value	Potential Impact	Likelihood	Consequence	Risk	Comment
Land	Spill/leak during plant maintenance activities or equipment failure causes a release of contaminants to soil.	Unlikely	Insignificant	Low	• All processing activities shall be undertaken inside the proposed Briquette Plant building which will have a sealed concrete slab. • Plant and equipment shall be maintained as per the manufacturer's specifications to prevent spills and leaks of hydrocarbons. • Maintenance and major service/repair works to plant and/or equipment shall be undertaken at an offsite workshop. On-site repairs shall only occur if the works are minor maintenance, or the plant or equipment cannot be moved under its own power. • Spill kits shall be provided for immediate clean-up of any accidental spills/leaks. • Spills and leaks of contaminants at the site are not anticipated to present a significant soil contamination risk.
	Contaminated firewater is released from the site during an emergency and adversely impacts soil quality.	Unlikely	Minor	Low	• Section 8.1 outlines measures that shall be taken to reduce the risk of fire at the site and emergency response measures. • In the event of a fire at the site, the use of firewater shall be minimised as far as reasonably practicable and measures to contain firewater onsite shall be employed as required. • The proposed Briquette Plant is not anticipated to present a significant soil contamination risk in the event of a fire.

Environmental Value	Potential Impact	Likelihood	Consequence	Risk	Comment
	Poor management of wastes causes a release to land.	Rare	Insignificant	Low	• All processing activities shall be undertaken inside the proposed building on sealed concrete hardstand. • General and recyclable wastes from staff amenities shall be stored in covered bins and removed from site regularly. • Regulated wastes generated from on-site maintenance activities (e.g., waste oils, oil filters, oily rags, etc.) shall be stored in closed containers inside the Briquette Plant building and be removed offsite by a licensed regulated waste contractor as required. • Ash generated from the operation of the boilers shall be collected in containers attached to each boiler (Appendix B) and disposed of offsite by a regulated waste contractor as required. The relevant EOW approvals shall be sought by the applicant prior to reusing ash as a saleable product. • There shall be no onsite waste disposal or burning of wastes. • Storage of wastes at the site is not anticipated to present a significant soil contamination risk.
Water	Floodwaters or stormwater runoff from the site may entrain woodchip or high sediment loads from the unsealed areas at the site.	Occasionally	Insignificant	Low	• All processing activities shall be undertaken inside the proposed Briquette Plant building on sealed concrete hardstand. • Regular maintenance shall be undertaken to collect any loose woodchip (e.g., sweeping, vacuum, etc.). • The site shall maintain the existing point of discharge along the eastern boundary.

Environmental Value	Potential Impact	Likelihood	Consequence	Risk	Comment
					• A bioretention trench shall be constructed along the eastern boundary of the site to collect stormwater runoff prior to leaving the site to filter out sediment and attenuate peak flows. • All buildings at the site shall be connected to attenuation tanks that connect to the downpipes of the buildings and discharge at a low flow to the bioretention trench. • Section 8.2 outlines measures that shall be taken to prepare the site for heavy rainfall or a flooding event and associated emergency response measures. • The proposed Briquette Plant is not anticipated to present a significant contamination risk to floodwaters or stormwater.
	Spill/leak during plant maintenance activities or equipment failure causes a release of contaminants to stormwater, surface water or groundwater.	Unlikely	Insignificant	Low	• All processing activities shall be undertaken inside the proposed Briquette Plant building on sealed concrete hardstand. • Plant and equipment shall be maintained in accordance with the manufacturer's specifications to prevent spills and leaks of hydrocarbons. • Maintenance and major service/repair works to plant and/or equipment shall be undertaken at an offsite workshop. On-site repairs shall only occur if the works are minor maintenance, or the plant or equipment cannot be moved under its own power. • Spill kits shall be provided for immediate clean-up of any accidental spills/leaks. • Dingo Creek is located approximately 150 m from the site.

Environmental Value	Potential Impact	Likelihood	Consequence	Risk	Comment
					• Groundwater is deep (at least 33.5m) and at a low risk of impact. • Spills and leaks of contaminants at the site are not anticipated to present a significant contamination risk to waters.
	Contaminated firewater is released from the site during an emergency and adversely impacts water quality.	Unlikely	Minor	Low	• Groundwater is deep (at least 33.5m) and at a low risk of impact. • Dingo Creek is located approximately 150 m from the site. • Section 8.1 outlines measures that shall be taken to reduce the risk of fire at the site and emergency response measures. • In the event of a fire at the site, the use of firewater shall be minimised as far as reasonably practicable and measures to contain firewater onsite shall be employed as required. • The proposed Briquette Plant is not anticipated to present a significant contamination risk to waters in the event of a fire.
	Poor management of wastes causes a release to waters.	Rare	Insignificant	Low	• All processing activities shall be undertaken inside the proposed Briquette Plant building on sealed concrete hardstand. • General and recyclable wastes from staff amenities shall be stored in covered bins and removed from site regularly. • Regulated wastes from on-site maintenance activities (e.g., waste oils, oil filters, oily rags, etc.) shall be stored in closed containers inside the Briquette Plant building and be removed offsite by a licensed regulated waste contractor as required.

Environmental Value	Potential Impact	Likelihood	Consequence	Risk	Comment
					• Ash generated from the operation of the boilers shall be collected in containers attached to each boiler (Appendix B) and disposed of offsite by a regulated waste contractor as required. The relevant EOW approvals shall be sought by the applicant prior to reusing ash as a saleable product. • There shall be no onsite waste disposal or burning of wastes. • Storage of wastes at the site is not anticipated to present a significant contamination risk to waters.
Noise, Air, Odour and GHG emissions	Noise emissions from the operation of plant/equipment and vehicle movements causes nuisance at sensitive receptors.	Unlikely	Insignificant	Low	• The site is located within an industrial area. Nearby land uses include a transport depot, other manufacturing facilities, roads, and retail premises. • The nearest noise sensitive receptors to the site are shown in Figure 2. The closest noise sensitive receptor to the site is located approximately 193m west. • Primary noise sources at the proposed Briquette Plant will be mechanical plant and equipment. An estimated noise level of 95 dB(A) indoors for the Briquette Plant was calculated from information provided by Recycling Technologies Group. • A distance attenuation calculation was undertaken based on the general rule that noise will decrease by 6 dB with a doubling of distance from a point source (DES, 2020). Based on an estimated noise level of 95 dB(A) at the façade of the proposed Briquette Plant building and a distance of 193 m (Figure 2), the calculated noise level at the nearest noise sensitive

Environmental Value	Potential Impact	Likelihood	Consequence	Risk	Comment
					receptor (commercial premise) was 49 dB(A)[2]. This complies with the commercial (indoor) Acoustic Quality Objectives (AQOs) of 52 dB[3] provided at Schedule 1 of the Environmental Protection (Noise) Policy 2019 (EPP Noise) when the commercial premises is open for business. • The SBMP outlines measures that shall be taken to reduce noise emissions from the operation of the Briquette Plant at the site. • No significant impacts to amenity in relation to noise emissions from the proposed Briquette Plant are anticipated.
	Air emissions from the operation of plant and equipment causes harm at sensitive receptors.	Unlikely	Insignificant	Low	• The nearest air quality sensitive receptors to the site are shown in Figure 2. The closest air quality sensitive receptor to the site is located approximately 152m west. • Ash generated from the boilers will be collected in containers attached to each boiler (Appendix B) and shall be collected by a regulated waste contractor as required. • Air emissions from the proposed Briquette Plant will be released via one (1) exhaust stack above the roofline of the belt drier fans. The air emissions will be a combination of the following sources, which are

[2] Attenuation from 1m (façade of proposed briquette facility) to 193m (façade of nearest noise sensitive receptor) = 45.6 dB total attenuation (rounded to 46 dB (nearest whole number) for comparison with the noise assessment criteria) (DES, 2020). 95 dB – 46 dB = 49 dB.

[3] Assuming a 7 dB(A) correction to account for the façade attenuation provided by a normal, naturally ventilated building with opened windows (ASK Consulting Engineers, 2011 & EPA, 2004).

Environmental Value	Potential Impact	Likelihood	Consequence	Risk	Comment
					not listed pollutants under the Environmental Protection (Air) Policy 2019: • Flue gases from the boiler, which are generated from burning woodchip blended with green sawdust, will be filtered to remove contaminants and then piped directly to the belt drier where it will be emitted as 'hot air (excess heat) with the air emissions from the belt drier. • Hot air (excess heat) from the belt drier. • All processing activities shall be undertaken inside the proposed Briquette Plant building. • Traffic at the site will be on gravel access tracks. Watering of the unsealed surfaces shall be undertaken as required to minimise fugitive dust emissions from the site. • The proposed Briquette Plant is not anticipated to cause air quality impacts at sensitive receptors.
	Odour emissions from the storage of stockpiled woodchip and processing operations causes nuisance at sensitive receptors.	Unlikely	Insignificant	Low	• All processing activities shall be undertaken inside the proposed Briquette Plant building. • Processing of the woodchip through the proposed Briquette Plant will be at a rate of 16m^3/h. Therefore, the maximum time that woodchip would be stored in the designated bunker before being processed is approximately four (4) days. Odorous conditions are therefore unlikely to be generated from the storage of woodchip at the site due to the proposed indoor storage and short storage period. • No odorous emissions will be released from the boiler or the belt drier exhaust stack above the roofline (i.e., only hot air).

Environmental Value	Potential Impact	Likelihood	Consequence	Risk	Comment
					• The proposed Briquette Plant is not anticipated to cause odour nuisance at sensitive receptors.

	GHG emissions are released to the atmosphere as a direct result of the operation of the proposed Briquette Plant (i.e., Scope 1 under the DETSI's GHG Guideline) that significantly contribute to climate change.	Unlikely	Insignificant	Low	The following information was collated to respond to Table 3 of the DETSI's Greenhouse gas emissions Guideline (2024) regarding the application requirements for low emitters (i.e., generate <25,000t of CO_2-e per year):
					• Qualitative comparison of the proposed operation with a typically larger emitter to demonstrate categorisation as a 'low emitter' (i.e., < 25,000 tonnes CO2-e per year):
					  • As outlined at Table 2, the proposed operation would not actually include timber milling and woodchipping at the site and would only process approximately **12,000t of woodchip per year** to produce an output of approximately 6,000t of briquette per year. Appendix 2 of the DETSI's Emission scores profile for environmentally relevant activities (2024) does not list 'Greenhouse Levels' for ERA 47 (b) as a contaminant to be considered when determining an emissions score for ERA 47 (b).
					  • Comparatively, Appendix 2 of the DETSI's Emission scores profile for environmentally relevant activities (2024) does not list 'Greenhouse Levels' until the threshold of ERA 47 (c), which includes sawmilling **20,000t to 100,000t/yr.**
					  • The throughput of the proposed operation is at least 40% less than ERA 47 (c) where GHG emissions are considered to be a risk for determining an emissions score.

Environmental Value	Potential Impact	Likelihood	Consequence	Risk	Comment

					• The following mitigation measures shall be implemented to minimise GHG emissions and improve future GHG emissions:
					  • GHG emissions shall adhere to the DETSI's GHG abatement hierarchy as far as reasonably practicable.
					  • Reduce vehicle idling time.
					  • Optimise and schedule vehicle operations to reduce fuel consumption.
					  • Minimise transportation distances and optimise supply chains to reduce fuel consumption where reasonably practicable.
					  • Maintain plant and equipment in accordance with the manufacturer's recommendations.
					  • Consider GHG emissions when purchasing new plant and equipment.

Biodiversity	Clearing of protected vegetation communities (Regional Ecosystems or TECs).	Rare	Insignificant	Low	• The site and surrounds have been heavily disturbed. • The site does not contain Regional Ecosystems or TECs. • The proposed Briquette Plant will not impact protected vegetation communities.
	Harm to threatened flora and fauna species and their habitat.	Rare	Insignificant	Low	• Threatened flora and fauna were not observed at the highly disturbed site and are unlikely to occur based on available habitat resources and ongoing disturbance and routine maintenance of the site. • The proposed Briquette Plant will not impact threatened flora or fauna or their habitat.

Environmental Value	Potential Impact	Likelihood	Consequence	Risk	Comment
	Introduction or spread of weeds, pests (rodents) and vectors (mosquitoes).	Unlikely	Minor	Low	• Weeds and pests (rodents, cockroaches, etc.) shall be managed as part of routine site maintenance. • The proposed Briquette Plant is not anticipated to present a significant risk with regards to the proliferation of weeds, pests (rodents) or vectors (mosquitoes).
	Harm to the ecological values and functions of waterways or wetlands.	Rare	Insignificant	Low	• The site and surrounds have been heavily disturbed. • The site does not contain or immediately adjoin any waterways or wetlands. Dingo Creek is located approximately 150 m from the site. • All processing activities shall be undertaken inside the proposed Briquette Plant building on sealed concrete hardstand. • The proposed Briquette Plant will not impact the ecological values or functions of any waterways or wetlands in the local area.
	Adverse impacts to areas of environmental significance, landscape connectivity or protected areas.	Rare	Insignificant	Low	• The site and surrounds have been heavily disturbed. • The site does not provide important habitat or landscape connectivity value for local fauna. • The proposed Briquette Plant will not impact on landscape ecological values or connectivity.
	Adverse impacts on PEM (MSES or MNES) at the site.	Rare	Insignificant	Low	• The site and surrounds have been heavily disturbed. • No PEM (MSES or MNES) occur at or immediately adjoin the site. • The proposed Briquette Plant will not have a significant residual impact on PEM (MSES or MNES) and will therefore not require environmental offsets or referral under the EPBC Act.

Environmental Value	Potential Impact	Likelihood	Consequence	Risk	Comment
Visual Amenity	Infrastructure associated with the proposed Briquette Plant and its operations reduces the visual amenity of the site.	Rare	Insignificant	Low	• The site is zoned as Medium Impact Industry and is within an industrial area. It is heavily disturbed and currently used for the storage of timber. • The appearance of the proposed Briquette Plant will be consistent with nearby industrial land uses. • All processing activities shall be undertaken inside the proposed Briquette Plant building. • No significant impacts to visual amenity of the local area are anticipated from infrastructure and operations associated with the proposed Briquette Plant.
Cultural Heritage	The proposed Briquette Plant adversely impacts the cultural heritage values of the site.	Rare	Insignificant	Low	• There are no recorded cultural heritage values at the site. • No significant impacts to cultural heritage values are anticipated from the operation of the proposed Briquette Plant.

4 Environmental Management

4.1 Management Commitment

Parkside Building Supplies Pty. Ltd. are committed to providing a high standard of environmental performance, protection, and conservation of the natural environment at the site. This will be achieved by practicing good environmental management and the ongoing measurement, evaluation, and review of performance to ensure continual improvement.

Parkside Building Supplies Pty. Ltd. are committed to:

- Complying with all legal and other obligations that apply to the site for environmental protection.
- Providing adequate resources to implement this SBMP and the associated environmental protection and monitoring measures.
- Achieving environmental goals outlined in the Environmental Control Plans (ECPs) provided at Section 4.3.
- Monitoring compliance with this SBMP and seeking to continually improve environmental performance at the site.

4.2 Environmental Management Responsibilities

4.2.1 General Environmental Duty

All personnel at the site shall comply with their General Environmental Duty under the *Environmental Protection Act 1994* (EP Act). This means a person must not carry out any activity that causes, or is likely to cause environmental harm, unless all reasonably practicable measures to prevent or minimise the harm have been taken.

4.2.2 Duty to Notify of Environmental Harm

All persons have a duty under the EP Act to notify the Department of the Environment, Tourism, Science and Innovation (DETSI) of incidents or emergencies that cause or threaten material or serious environmental harm. This obligation is detailed further at Section 7.

4.2.3 Duty to Restore the Environment

All persons have a duty under the EP Act to take actions as soon as reasonably practicable to rehabilitate or restore the environment as far as reasonably practicable to its condition before the harm was caused. The duty to restore applies if a person has caused or permitted an incident involving contamination to occur that results in unlawful environmental harm.

When deciding the measures required to restore the environment, regard for the following must be had:

- The nature and extent of the environmental harm caused by the contamination.
- The sensitivity of the receiving environment to remedial measures that might be taken in relation to the environmental harm.
- The current state of technical knowledge for remedial measures that might be taken in relation to the environmental harm.
- The likelihood of successful application of the different measures that might be taken in relation to the environmental harm.

- The financial implications of the different measures that might be taken in relation to the environmental harm.

The Duty to Restore the Environment Information Sheet can be downloaded from the DETSI website.

4.2.4 Roles and Responsibilities

All personnel, including sub-contractors and visitors, are responsible for environmental protection during operations and maintenance works at the site. Responsibilities and reporting lines for environmental matters are described in Table 5.

Table 5 Roles and responsibilities

Role	Responsibilities	Reports to
Site Manager	• Ensure operations comply with all relevant regulatory and project requirements. • Monitor changes to legislation which may affect site operations. • Ensure this SBMP is fully implemented, and environmental protection is not secondary to operational requirements. • Provide adequate resources for implementation of the SBMP. • Ensure that all personnel understand, accept, and fully carry out their obligations for environmental protection and that they are adequately trained, instructed, and resourced to fulfil their obligations. • Undertake the annual environmental management review and SBMP review. • Seek relevant approvals for any required works or changes to the site conditions outside the limits of the applicable approvals / permits / plans. • Conduct environmental incident investigations as required. • Direct that works be stopped immediately where there is an actual or potential risk of environmental harm. • Comply with General Environmental Duty, Duty to Notify of Environmental Harm, and Duty to Restore the Environment.	Regulatory authorities
Other personnel (includes staff, visitors, inspectors, and sub-contractors)	• Regard environmental protection as a central theme in their actions. • Conduct operations as per the SBMP to reduce the risk of adverse environmental impacts. • Report any defects in plant or equipment and keep the workplace in a tidy state. • Notify the Site Manager of any unexpected changes to site conditions. • Assist with environmental incident investigations as required. • Stop works where there is an actual or potential risk of environmental harm and notify the Site Manager. • Comply with General Environmental Duty, Duty to Notify of Environmental Harm, and Duty to Restore the Environment.	Site Manager

4.3 Environmental Control Plans

Environmental control plans (ECPs) have been developed to document site-specific environmental management measures to address the key environmental management considerations for the site. Alternative controls to those outlined in the ECPs may be adopted if the objectives of the relevant ECP can still be met and should be documented in an updated SBMP. The ECPs provide management measures in relation to:

1. Noise, Air, and Light.
2. Pest and Vectors.
3. Land and Water.
4. Dangerous Goods and Hazardous Substances.
5. Liquid and Solid Waste.

Specific controls in relation to environmental emergency preparation and response (fire, flood, and spill response) are provided at Section 8.

ECP 1 – Noise, air, and light management measures		
Guidelines and Legislative Requirements		
EP Act, EPP Air, EPP Noise, Development Approval and Environmental Authority.		
Performance Goal		
No complaints of nuisance regarding noise, air, odour, or light emissions from the site.		
Management Actions	**Responsibility**	**Frequency**
Air Quality & Odour		
Plant and equipment shall be inspected and maintained in accordance with site operational procedures and manufacturer's specifications to minimise fugitive air emissions from leaking plant and equipment.	Site Manager	At all times
General waste bins shall be covered and emptied regularly to prevent wind-blown litter and odour emissions.	Site Manager	At all times
Wood shavings from all stages of the glue-lam manufacturing process shall be sucked up via the dust extraction system and directed to the hopper.	Site Manager	At all times
Dust suction pipework shall be established over the briquette press to capture any dust emissions.	Site Manager	At all times
Air emissions from the proposed Briquette Plant shall be released via one (1) exhaust stack above the roofline of the belt drier fans.	Site Manager	At all times
Ash generated from the operation of the boilers shall be collected in containers attached to each boiler (Appendix B) and disposed of offsite by a regulated waste contractor as required. The relevant EOW approvals shall be sought by the applicant prior to reusing ash as a saleable product.	Site Manager	At all times
All manufacturing activities shall be undertaken within the designated buildings.	All persons	At all times
Regular sweeping of the building floors shall be undertaken to collect any loose wood shavings. The use of air blowers shall be minimised where possible.	Site Manager	Daily
Unsealed surfaces shall be maintained to minimise dust emissions from heavy vehicle access.	Site Manager	At all times
Dust suppression measures, such as surface watering by a water truck, shall be used on unsealed surfaces to minimise dust emissions.	Site Manager	As required
No burning of wastes or other materials on site shall be permitted.	All persons	At all times
Noise		
Maintain plant and equipment in accordance with the manufacturer's requirements to minimise noise emissions.	Site Manager	At all times
When purchasing new manufacturing equipment, models with low noise emissions shall be preferred where practicable.	Site Manager	As required
No unnecessary revving or idling of engines on mobile and stationary machines and shut down any equipment not in use.	All persons	At all times
A speed limit of 20 km/hr shall apply at the site.	All persons	At all times

Ensure loads are secured to minimise rattling and other noise emissions when transporting materials or products.	All persons	At all times
The site shall adhere to the operating hours outlined at Table 2.	All persons	At all times
All manufacturing activities shall be undertaken within the designated buildings.	All persons	At all times
The hammer mill inside the Briquette Facility shall be contained within a cabin to attenuate noise emissions.	Site Manager	At all times
Lighting		
All external lighting shall comply with Australian Standard *AS4282 Control of the Obtrusive Effects of Outdoor Lighting*.	Site Manager	At all times
Monitoring		
Monitoring of noise, air, odour, and light emissions at sensitive receptors shall be undertaken upon written request by the administering authority in response to a complaint of nuisance.	Site Manager	As required
Site inspections shall include inspection of air, odour, noise, and lighting controls at the site to ensure compliance with the SBMP.	Site Manager	Monthly
Corrective Actions		
Complaints and incidents in relation to air, odour, noise, and light emissions from the site shall be investigated by the Site Manager to identify necessary corrective actions for implementation.		
Reporting		
Monitoring results shall be provided to the administering authority within 28 business days of a request to conduct nuisance-based monitoring.	Site Manager	As required

ECP 2 – Pest and vector management measures		
Guidelines and Legislative Requirements		
Biosecurity Act 2014, Development Approval and Environmental Authority.		
Performance Goal		
No proliferation of pests or vectors at the site.		
Management Actions	**Responsibility**	**Frequency**
Putrescible wastes (e.g., food wastes) shall be kept in covered bins to prevent access by vermin and be removed regularly from the site.	Site Manager	At all times
Feeding of wild animals at the site is prohibited.	All persons	At all times
Pest animal control shall only be undertaken by contractors with appropriate permits and licences.	Site Manager	As required
Offcuts (defected wood) from the glue lines building shall be stored in a bulk bin during processing, then ground and sent by the extraction system to the hopper.	Site Manager	At all times
Wood shavings shall be discharged via the dust extraction system to the hopper and removed from the site at least every 2-3 days.	Site Manager	Within 2-3 days
Weed management activities shall be undertaken as required to control weeds that are listed under the *Biosecurity Act 2014* using registered herbicides.	Site Manager	As required
Monitoring		
Site inspections shall include monitoring for pest and vector infestations.	Site Manager	Monthly
Corrective Actions		
Incidents in relation to pests and vectors at the site shall be investigated by the Site Manager to identify necessary corrective actions for implementation.		
Reporting		
If invasive plants or animals listed as Category 1 or 2 restricted matter at Schedule 2 of the *Biosecurity Act 2014* are identified at the site, these shall be reported to Biosecurity Queensland by calling 13 25 23.	Site Manager	Within 24 hours of becoming aware

ECP 3 – Land and water contamination prevention management measures		
Guidelines and Legislative Requirements		
EP Act, EPP Water and Wetland Biodiversity, Preliminary Stormwater Management Report, Environmental Authority and Development Approval.		
Performance Goal		
No material or serious environmental harm to soil or water quality.		
Management Actions	**Responsibility**	**Frequency**
General Requirements		
No refuelling of plant and equipment shall be undertaken on-site. All plant and equipment refuelling shall be undertaken at the existing fuelling area at the Wondai Dry Mill.	Site Manager	At all times
Offcuts (defected wood) shall be stored in a bulk bin during processing, then ground and sent by the extraction system to the hopper.	Site Manager	At all times
Wood shavings shall be discharged via the dust extraction system to the hopper and removed from the site every 2-3 days.	Site Manager	At all times
Ash generated from the operation of the boilers shall be collected in containers attached to each boiler (Appendix B) and disposed of offsite by a regulated waste contractor as required. The relevant EOW approvals shall be sought by the applicant prior to reusing ash as a saleable product.	Site Manager	At all times
Regular sweeping of the building floors shall be undertaken to collect any loose wood shavings. The use of air blowers shall be minimised where possible.	Site Manager	Daily
General wastes shall be stored in covered containers and removed from site at least weekly.	Site Manager	At all times
Regulated wastes from maintenance activities (e.g., waste oils, oil filters, oily rags, etc.) shall be stored in covered containers and removed from site by a licensed regulated waste contractor.	Site Manager	As required
Maintain the existing point of discharge along the eastern boundary of the site.	Site Manager	At all times
A bioretention trench shall be constructed along the eastern boundary of the site to collect stormwater runoff prior to leaving the site to filter out sediment and attenuate peak flows.	Site Manager	At all times
All buildings at the site shall be connected to attenuation tanks that connect to the downpipes of the buildings and discharge at a low flow to the bioretention trench.	Site Manager	At all times
Monitor the site for erosion and adequately maintain all stormwater infrastructure, outlets, and discharge points.	Site Manager	At all times
Spills and Leak Prevention and Response		
Maintain and operate plant and equipment within the manufacturer's recommended performance specifications.	All persons	At all times
The storage and use of hazardous chemicals at the site shall be in accordance with the SDS provided at Appendix B.	All persons	At all times

All storage of hazardous chemicals shall occur within the bunded glue-room inside the Glue-lam building.	All persons	At all times
Spills shall be cleaned up immediately.	All persons	At all times
Personnel shall be trained in spill prevention and spill response/control procedures.	Site Manager	At all times
Spill kits shall be located onsite. Ensure that spill clean-up kits are stocked and replenished appropriately and are in the correct location for use.	Site Manager	At all times
Any chemical spills that occur shall be removed using 'dry' cleaning methods (e.g., use of absorbent materials, sweeping, etc.). The use of degreasers, detergents and hosing down of areas is prohibited. Consult the SDS for the preferred containment/clean-up materials (Appendix B). All used absorbent materials shall be managed and disposed of as regulated waste.	All persons	At all times
Emergency – Fire		
During operations, undertake all reasonably practicable management measures to prevent a fire (refer to Section 8.1).	All persons	At all times
Minimise water use during a fire as far as safe and practicable to limit wastewater generation.	All persons	During a fire
Contained firewater shall be removed by a regulated waste contractor.	Site Manager	During a fire
Monitoring		
Inspect bunds, process areas, storage areas, unsealed areas, and stormwater infrastructure (including outlets and discharge points).	Site Manager	Monthly and prior to and after rainfall exceeding 10 mm in 24 hours
Inspect spill kits and replenish as required.	Site Manager	Monthly and after a spill
If soil or water contamination is encountered at the site or occurs during operations and causes or threatens material or serious environmental harm, it shall be investigated and managed by a Suitably Qualified Person in accordance with the EP Act, National Environmental Protection (Assessment of Site Contamination) Measure 1999 (Amended in 2013) and the Monitoring and Sampling Manual 2018.	Site Manager	As required
Corrective Actions		
Incidents in relation to soil and water management at the site shall be investigated by the Site Manager to identify necessary corrective actions for implementation.		
Reporting		
If runoff from the site causes or threatens serious or material environmental harm, the incident shall be notified to the DETSI (refer to Section 7.3).	Site Manager	As required

ECP 4 – Dangerous goods and hazardous chemical management measures		
Guidelines and Legislative Requirements		
Development Approval, Environmental Authority, *AS1940-2017: The Storage and Handling of Flammable and Combustible Liquids*, Workplace Health and Safety Queensland's Managing Risks of Hazardous Chemicals in the Workplace – Code of Practice 2018 and EP Act.		
Performance Goals		
• No environmental harm caused by the storage, use or handling of dangerous goods or hazardous chemicals at the site. • Daily pre-start checks completed for all plant and equipment. • Plant and equipment maintained in accordance with the manufacturer's recommendations.		
Management Actions	**Responsibility**	**Frequency**
General Management Requirements		
Spills shall be cleaned up immediately. Personnel shall be trained in spill prevention and spill response/control procedures.	All persons	At all times
Spill kits shall be located on-site. Ensure that spill clean-up kits are stocked and replenished appropriately, and in the correct location for use.	Site Manager	At all times
Appropriate fire extinguishers shall be provided on site for flammable and combustible chemicals.	Site Manager	At all times
Any chemical spills that occur shall be removed using 'dry' cleaning methods (e.g., use of absorbent materials, sweeping, etc.). Consult the SDS for the preferred containment/clean-up materials (Appendix B). All used absorbent materials shall be managed and disposed of as regulated/hazardous waste.	All persons	At all times
All storage of glues and resins at the site shall be within the designated glue-room inside the Glue-lam building which shall be bunded and climate controlled as per the product specifications (Appendix B).	Site Manager	At all times
Keep small packages (>15 litres) of chemicals and other liquids within a secondary containment system that is impervious to the materials stored within it and managed to prevent the release of contaminants to waters or land. Secondary containment may be fixed bunding, self-bunding pallets or double skinned containers. Bunds should be large enough to contain the volume of the largest container + 10%.	Site Manager	At all times
The storage and use of hazardous chemicals at the site shall be in accordance with the SDS provided at Appendix B.	All persons	At all times
No onsite disposal of chemical wastes shall be permitted. Any chemical wastes shall be removed as regulated waste by a regulated waste contractor.	All persons	At all times
The SDS provided at Appendix B shall be kept on site.	Site Manager	At all times
All dangerous goods and/or hazardous substances shall be classified, stored, labelled, and used in accordance with the Code of Practice, SDS, manufacturer's requirements and the relevant Australian Standard.	All persons	At all times

No refuelling of plant and equipment shall be undertaken on-site. All plant and equipment refuelling shall be undertaken at the existing fuelling area at the Wondai Dry Mill.	Site Manager	At all times
Plant and Equipment Maintenance		
Maintenance and major service/repair works to plant and/or equipment shall be undertaken at an offsite workshop. On-site repairs shall only occur if the works are minor maintenance, or the plant or equipment cannot be moved under its own power.	Site Manager	At all times
Spill kits, drip trays, and any other necessary controls shall be used during repair works to plant and equipment.	All persons	As required
Waste oil, oil filters, oily rags, and any other wastes from minor maintenance activities shall be stored in a designated container and removed from the site by a regulated waste contractor.	Site Manager	As required
Daily pre-start checks shall be completed on all plant and equipment.	Operators	Daily
Plant and equipment shall be operated and maintained in accordance with manufacturer's specifications.	Site Manager	At all times
Monitoring		
Inspect dangerous goods and hazardous chemical storages and bunds.	Site Manager	Monthly
Monitor equipment operating hours/mileage to ensure plant and equipment are serviced at the required intervals.	Operators	Ongoing
Corrective Actions		
Incidents in relation to dangerous goods and hazardous chemicals at the site shall be investigated by the Site Manager to identify necessary corrective actions for implementation.		
Reporting		
Large spills or leaks that cause or threaten serious or material environmental harm shall be notified to the DETSI (refer to Section 7.3).	Site Manager	As required
An SDS register shall be kept on site and updated as required. Each SDS shall be updated every five (5) years (or sooner if required).	Site Manager	At all times
Daily pre-start forms shall be kept with the plant and equipment.	Operators	At all times
Service records shall be retained and made available upon request.	Site Manager	At all times

ECP 5 – Liquid and solid waste management measures		
Guidelines and Legislative Requirements		
EP Act, *Waste Reduction and Recycling Act 2011*, Development Approval and Environmental Authority.		
Performance Goals		
• Wastes correctly segregated and stored. • No illegal waste disposal or burning of wastes. • No unauthorised release of wastes to the environment that causes environmental harm. • All wastes transported by appropriately licensed waste transporters to waste facilities that are licensed to receive the wastes. • All waste tracking documents and receipts retained.		
Management Actions	**Responsibility**	**Frequency**
The site shall be kept in a clean and tidy state.	All persons	At all times
Regular sweeping of the building floors shall be undertaken to collect any loose wood shavings. The use of air blowers shall be minimised where possible.	Site Manager	Daily
General wastes shall be segregated and stored in covered bins in a designated storage area.	All persons	At all times
Covered bins shall be provided to prevent windblown litter, access by birds/vermin and rainfall ingress.	Site Manager	At all times
General wastes shall be removed offsite at least weekly for disposal at a licensed waste facility.	Site Manager	At all times
Trucks transporting waste shavings offsite shall have covered loads to prevent spills offsite.	Site Manager	At all times
Wastes of any kind shall not be burnt or disposed of on site.	All persons	At all times
Regulated wastes from onsite maintenance activities or spill clean-up shall be disposed of by a licensed regulated waste contractor.	Site Manager	As required
Wood shavings shall be discharged to the hopper via the dust extraction system and removed from site every 2-3 days.	Site Manager	At all times
Wood offcuts shall be collected in a $2m^3$ bulk bin during processing activities, ground and sent via the dust extraction system to the hopper.	Site Manager	At all times
Ash generated from the operation of the boilers shall be collected in containers attached to each boiler (Appendix B) and disposed of offsite by a regulated waste contractor as required. The relevant EOW approvals shall be sought by the applicant prior to reusing ash as a saleable product.	Site Manager	At all times
Wastewater from staff amenities shall be discharged to the sewer mains system.	Site Manager	At all times
Monitoring		
Waste storage areas shall be inspected for leaks, damage and/or maintenance requirements.	Site Manager	Monthly
Corrective Actions		

Incidents in relation to waste management at the site shall be investigated by the Site Manager to identify necessary corrective actions for implementation.		
Reporting		
Retain records/receipts of regulated waste removal from the site.	Site Manager	At all times and retain for at least five (5) years

5 Rehabilitation Plan

Where disturbed land at the site will not be subject to any further disturbance and not be required for any current or future operational use it shall be rehabilitated. Rehabilitation shall be planned and executed to ensure that:

- Any infrastructure that is not required by the landholder is removed. Infrastructure that is required by the landholder is left in a safe and stable condition.
- All liquid and solid wastes are removed.
- Suitable vegetation for the location and any proposed future land use is established and sustained for exposed earthen surfaces to minimise erosion.
- The quality of soil and water, including seepage, released from the site does not cause environmental harm.
- The potential for environmental nuisance caused by dust is minimised.
- The final landform is stable and protects the safety of humans, stock, and wildlife.

6 Complaint Management

The Site Manager shall maintain and update the Complaint Log (Appendix D) for all complaints received. The following details must be recorded for all complaints received:

- Time, date, name, and contact details of the complainant.
- Reason for the complaint.
- Any investigations undertaken.
- Conclusions formed.
- Any actions taken.
- Feedback to the complainant.
- Assessment of the complainant's attitude to the company response.
- Further follow-up action as required.

The following procedure shall be used to manage all complaints received about the site operations (Figure 3).

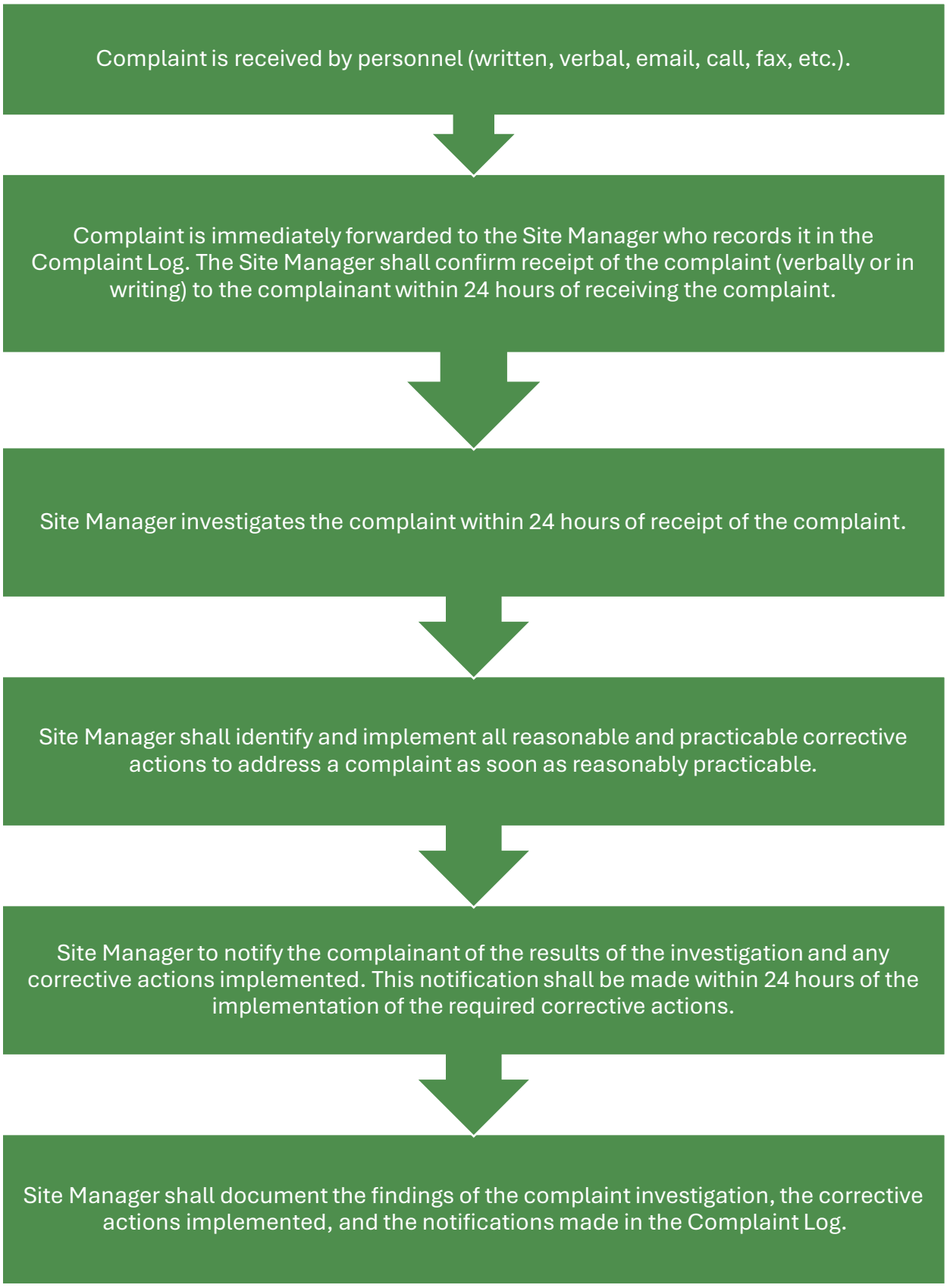

Figure 3 Complaint Management Procedure

7 Environmental Hazards, Incidents & Emergencies

7.1 Categories of Environmental Harm

There are three (3) categories of environmental harm for environmental incidents and emergencies under the EP Act (Table 6).

Table 6 Categories of environmental harm

Category	Definition	Internal reporting required?	External reporting required?
Nuisance	An unreasonable interference or likely interference with an environmental value caused by: • Aerosols, fumes, light, noise, odour, particles or smoke; or • An unhealthy, offensive or unsightly condition because of contamination; or • Another way prescribed by regulation.	Yes	Yes, but only if a breach of an EA condition (refer to Section 12.1)
Material	Environmental harm that: • Is not trivial or negligible in nature, extent or context; or • Causes actual or potential loss or damage to property of an amount of, or amounts totalling, $10K-$100K; or • Results in costs of $10K-$100K for actions to prevent or minimise the harm and rehabilitate or restore the environment to its condition before the harm. • Note – Matters which are characterised as environmental nuisance (e.g., odour, noise, etc.) may constitute environmental harm that is material.	Yes	Yes
Serious	Environmental harm that: • Is irreversible, or a high impact or widespread; or • Causes harm to an area of high conservation value or special significance; or • Causes actual or potential loss or damage to property of an amount of, or amounts totalling more than $100K; or • Results in costs of more than $100K for actions to prevent or minimise the harm and rehabilitate or restore the environment to its condition before the harm. • Note – Matters which are characterised as environmental nuisance (e.g., odour, noise, etc.) may constitute environmental harm that is serious.	Yes	Yes

7.2 Environmental Hazards and Incidents

7.2.1 Hazard and Incident Reporting

All environmental hazards, incidents and emergencies must be reported to the Site Manager as soon as possible but no longer than 24 hours after becoming aware of the matter.

All hazards, incidents and emergencies shall be investigated by the Site Manager and any other relevant personnel to identify root causes and the appropriate course of action taken to prevent a recurrence. Corrective actions are to be evaluated on the basis of the hierarchy of controls with the aim of elimination of the impacts identified. This SBMP may require review and amendment following identification of a hazard, incident, or emergency.

If a hazard, incident, or emergency causes or threatens material or serious environmental harm, refer to Section 7.3 below for external reporting requirements.

7.2.2 Incident Management & Investigation

All incidents shall be investigated by the Site Manager to determine:

- Nature, type, location and extent of the incident and the affected area.
- Actual and/or potential environmental impacts of the incident.
- Suspected cause/s of the incident.
- Measures required to stop any further environmental harm.
- Remedial measures required to correct any environmental harm.
- Management measures to be implemented to prevent a recurrence of the incident.
- Incident reporting requirements for regulatory authorities (refer to Section 7.3 below).

The requirements for the environmental assessment of impacts of an incident shall be determined by the Site Manager who may seek advice from an environmental consultant. If an incident involves serious or material environmental harm or a breach of an Environmental Authority condition, the regulatory authority may also advise/direct the environmental assessment.

The assessment may include environmental monitoring of a contaminant release. Based on the nature and type of the incident, the Site Manager, in consultation with their environmental consultant, shall determine:

- Sampling and analytical requirements.
- Applicable guidelines or thresholds to apply to data for assessing compliance and level of impact.

7.3 External Reporting of Material or Serious Environmental Harm

All persons who become aware, or ought reasonably to have become aware, have a duty to notify the DETSI of incidents or emergencies that cause or threaten material or serious environmental harm. Environmental incidents or emergencies that cause or threaten material or serious environmental harm shall be reported to the DETSI in accordance with Table 7.

Table 7 External reporting of material or serious environmental harm

By	To	Within	Method
Employees, sub-contractors, or visitors	Site Manager	24 hours of becoming aware of the matter.	Verbal or written.
	If the Site Manager cannot be contacted, notification must be made directly to the DETSI.		Verbal initially followed by written.
Site Manager	DETSI	24 hours of becoming aware of the matter.	Verbal initially followed by written.

		This 24-hour period starts as soon as the Site Manager is first notified.	

The Duty to Notify of Environmental Harm Guideline and the standard written notification form to the DETSI for material or serious environmental harm can be downloaded from the DETSI website. Contact details for the DETSI are provided in Table 8.

Table 8 DETSI contact details

Method of contact	Details
Pollution Hotline	1300 130 372
Fax	(07) 3330 5875
Email	pollutionhotline@des.qld.gov.au
Web	https://www.detsi.qld.gov.au/
Registered Post	Permit and Licence Management Department of the Environment, Tourism, Science and Innovation GPO Box 2454 Brisbane 4001

8 Emergency Preparation and Response

This section provides an overview of response requirements for environmental emergencies that could reasonably be expected to occur at the site during operations. Incident reports and investigations are to be completed for any emergency at the site.

8.1 Fire

A fire has the potential to threaten the safety or health of people, cause environmental harm and damage infrastructure and equipment. The risk of fire at the site shall be reduced by:

- Provision and maintenance of firefighting equipment, such as fire extinguishers, at strategic locations at the site. Ensure the extinguishing media provided onsite is appropriate for the chemicals stored onsite (Appendix B).
- Monitor weather and bushfire warnings in the media.
- Regular monitoring and maintenance of plant and equipment in accordance with manufacturer's specifications.
- Training site personnel in emergency response to fire and the use of fire safety equipment.
- Compliance with *AS1940-2017: The storage and handling of flammable and combustible liquids*.
- Identification of a designated smoking area which is away from combustible materials and the provision of a cigarette bin at this location.
- Regular housekeeping at the site to remove wastes and prevent the accumulation of combustible materials and dusts.
- No burning of wastes or other materials at the site shall be permitted.

If a fire cannot be safely controlled with onsite resources, the matter shall be referred immediately to emergency services by calling triple zero (000).

8.2 Flooding or Heavy Rain

The north-eastern portion of the site is mapped in a Flood Hazard Area by the Flood Hazard Overlay of the South Burnett Planning Scheme. To prevent the potential contamination of stormwater or floodwaters, and impacts on the downstream receiving environment, the following strategies shall be employed:

- Keep the site in a clean and tidy state at all times.
- Ensure stormwater infrastructure is fully operational and maintained in accordance with ATC Engineers' Preliminary Stormwater Management Report (2025).
- If heavy rainfall and/or flooding is forecast, prepare the site by ensuring that plant, equipment, and materials are securely stored to minimise their contact with rainfall, stormwater, or floodwaters.
- Ensure all leaks and spills have been cleaned up and the source of the leak/spill rectified.

8.3 Spill Response

A chemical spill has the potential to threaten the safety or health of people, create a fire hazard or cause environmental harm. Where a chemical spill occurs, consult the SDS (Appendix C) for spill clean-up procedures and any necessary Personal Protective Equipment (PPE).

Spill response kits shall be kept at strategic locations on site. Equipment contained in spill response kits shall be replenished upon use, equal to the specified list contained with the kit. The Site Manager shall ensure that spill response kits are inspected monthly, and any missing items are replaced.

A spill response flow chart is provided at Figure 4. If a spill cannot be safely contained and controlled with onsite resources, the matter shall be referred immediately to emergency services by calling triple zero (000).

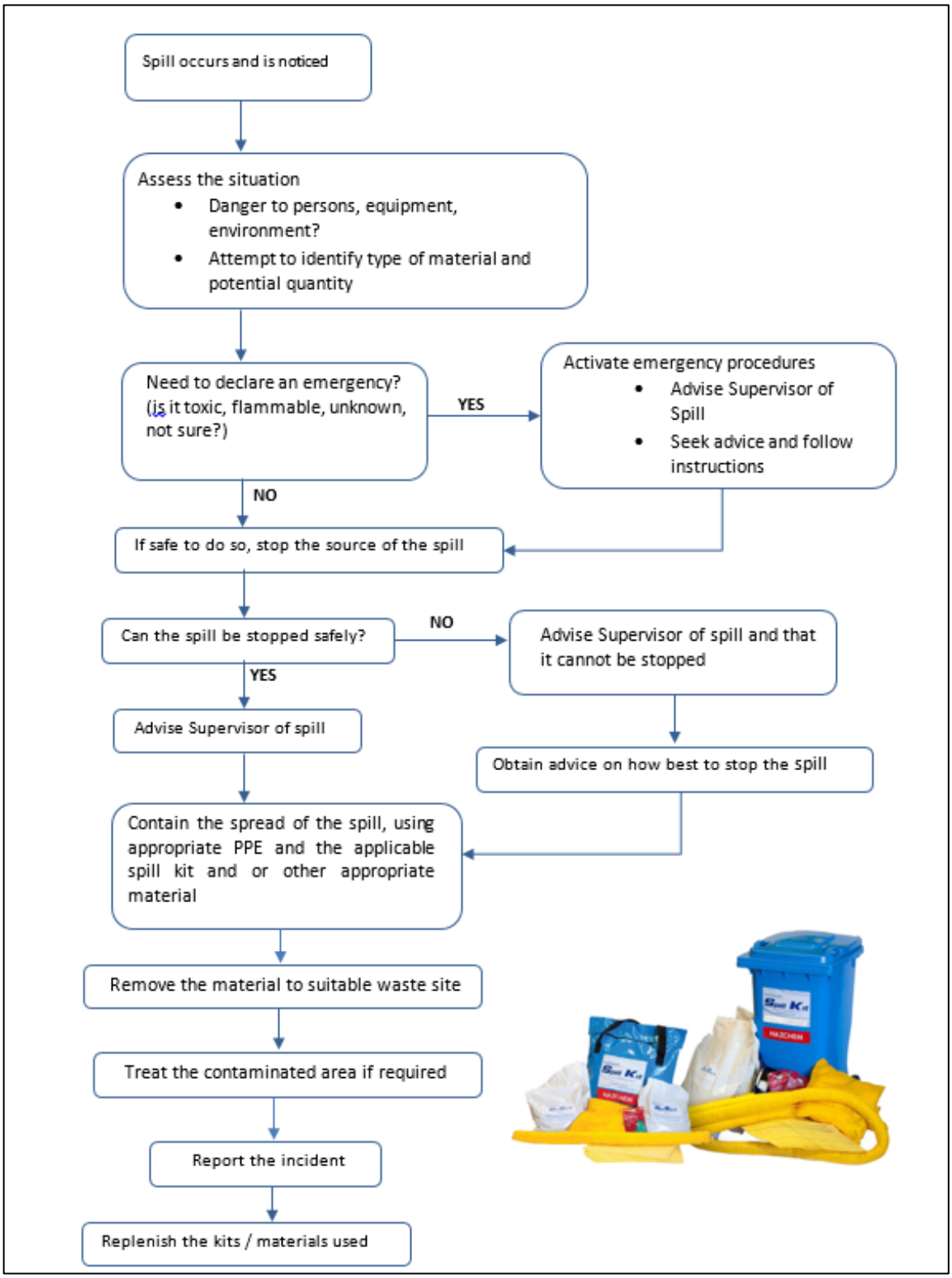

Figure 4 Spill Response Procedure

9 Inspections & Monitoring

9.1 Site Inspections

The Site Manager shall undertake monthly environmental site inspections of operations and work practices to:

- Ensure activities are being undertaken in accordance with approved procedures.
- Confirm that appropriate controls have been identified and are in place to minimise the risk of environmental harm.
- Identify any maintenance or workplace practice issues that need to be addressed.
- Identify potential environmental hazards that need to be addressed.

9.2 Environmental Monitoring

Environmental impacts of routine and non-routine operations, incidents and emergencies shall be assessed. Where environmental monitoring is required, it shall be completed by suitably qualified and experienced persons in accordance with legislated standards and guidelines.

All equipment used for environmental monitoring shall be fit for purpose and maintained, operated, and calibrated in accordance with the manufacturer's specifications. Where analysis of samples is required, samples shall be submitted to a NATA accredited laboratory.

Environmental monitoring records shall be retained and managed in accordance with Section 11.

10 Training and Communication

10.1 Environmental Awareness Training

10.1.1 Inductions

A site induction shall be given upon first entry to the site and annually thereafter to all personnel (staff, sub-contractors, and visitors) to ensure they are aware of their responsibilities and are competent to carry out works at the site. This shall include environmental awareness training which addresses the following:

- General Environmental Duty.
- Duty to Notify of Environmental Harm.
- Duty to Restore the Environment.
- Requirements of the SBMP.
- Environmental complaint, hazard and incident management and reporting.
- Emergency response.

Training records are to be maintained and kept on site in accordance with Section 11.

10.1.2 Ongoing Training

Ongoing staff training shall be undertaken as new activities are ready to start, new environmental risks are identified, or new processes are developed. This will usually be incorporated into a regular toolbox meeting and/or risk assessments prior to undertaking the job. Records of the special training sessions will be in a similar format to toolbox meeting minutes.

10.2 Internal Communication of Environmental Information

The Site Manager shall communicate information regarding environmental matters to site personnel on an as-required basis. The method of communication shall be determined by the Site Manager.

Protocols for internal reporting of environmental hazards, incidents and emergencies are outlined at Section 7.

10.3 Communication with Regulatory Authorities

There is no requirement for routine communication with regulatory authorities regarding environmental matters. Examples of where communication with regulatory authorities may be required include, but may not be limited to, the following:

- Environmental hazards, incidents and emergencies that cause or threaten material or serious environmental harm shall be reported to regulatory authorities in accordance with Section 7.
- Notifiable Activities (as per Schedule 3 of the EP Act) undertaken at the site shall be notified to the DETSI within 20 business days of their commencement.
- Biosecurity matters shall be reported in accordance with ECP 2: Pest and vector management measures (Section 4.3).
- A breach of an EA condition shall be reported to the DETSI within 24 hours (refer to Section 12.1).

11 Records Management

The Site Manager shall be responsible for managing environmental records for the site in accordance with Parkside Building Supplies Pty. Ltd.'s HSE management system procedures.

All environmental and site maintenance records shall be made available upon request by regulatory authorities. All environmental and site maintenance records shall be retained for no less than five (5) years.

Examples of records may include, but not be limited to, the following:

- Site observations and site diary entries.
- Complaints.
- Incidents, incident investigations and associated restoration works.
- Results of any environmental monitoring.
- Correspondence with regulatory authorities or any other party.
- Regulated waste disposal.
- Environmental management performance reviews.
- SBMP updates.
- Site emergencies.
- Training.

12 Review and Improvement

12.1 Non-conformances & Corrective Actions

A non-conformance is defined as failure to comply with the requirements of this SBMP, regulatory requirements and conditions of approvals and permits. Non-conformances may be identified through monitoring, inspections, or incident investigations.

Non-conforming activities shall be stopped by any person at the site in consultation with the Site Manager. The activity shall not recommence until an appropriate corrective action has been implemented. A corrective action must be identified and implemented for each identified non-conformance.

Any breach of the conditions of the Environmental Authority must be reported by the Site Manager to the administering authority within 24 hours of becoming aware of the breach. Records of the breach must be kept and include details of the breach, notifications made to the administering authority and corrective actions taken.

12.2 Environmental Management Performance Reviews

Environmental management performance reviews shall be undertaken annually as part of the continual improvement process. Reviews may also occur in addition to the annual reviews in response to matters that affect environmental management (e.g., incidents, emergencies, changes to site conditions and operations, permit conditions or legislation changes, etc.).

The annual environmental management review shall be undertaken by the Site Manager and any other key staff. The review shall consider:

- Monitoring, inspection, and audit results for the past year.
- Recent and relevant incidents and any lessons learnt.
- Management of complaints.
- Feedback from regulatory authorities.
- Tabling of any new legal or other obligations.
- The effectiveness of environmental controls.
- Adequacy of resources for environmental management.

Findings, actions, timeframes, and the responsible parties shall be recorded in accordance with Section 11.

12.3 SBMP Review and Update

The SBMP shall be reviewed at least annually by the Site Manager to determine if the management measures are appropriate for site operations and conditions. If the SBMP is not appropriate for site operations and conditions at the time of the review it shall be updated accordingly. Other triggers for review and update of the SBMP outside of the annual review cycle may include, but not be limited to:

- Following the issue of project approvals and permits.
- After an incident that causes environmental harm.
- Changes to the risk profile of the operation.
- Changes to relevant legislation or project approvals.
- Changes to operational methods or site conditions that require additional or alternative environmental controls to manage risk to environmental values.

Appendices

Appendix A Development Plans and Production Line Machinery Layouts

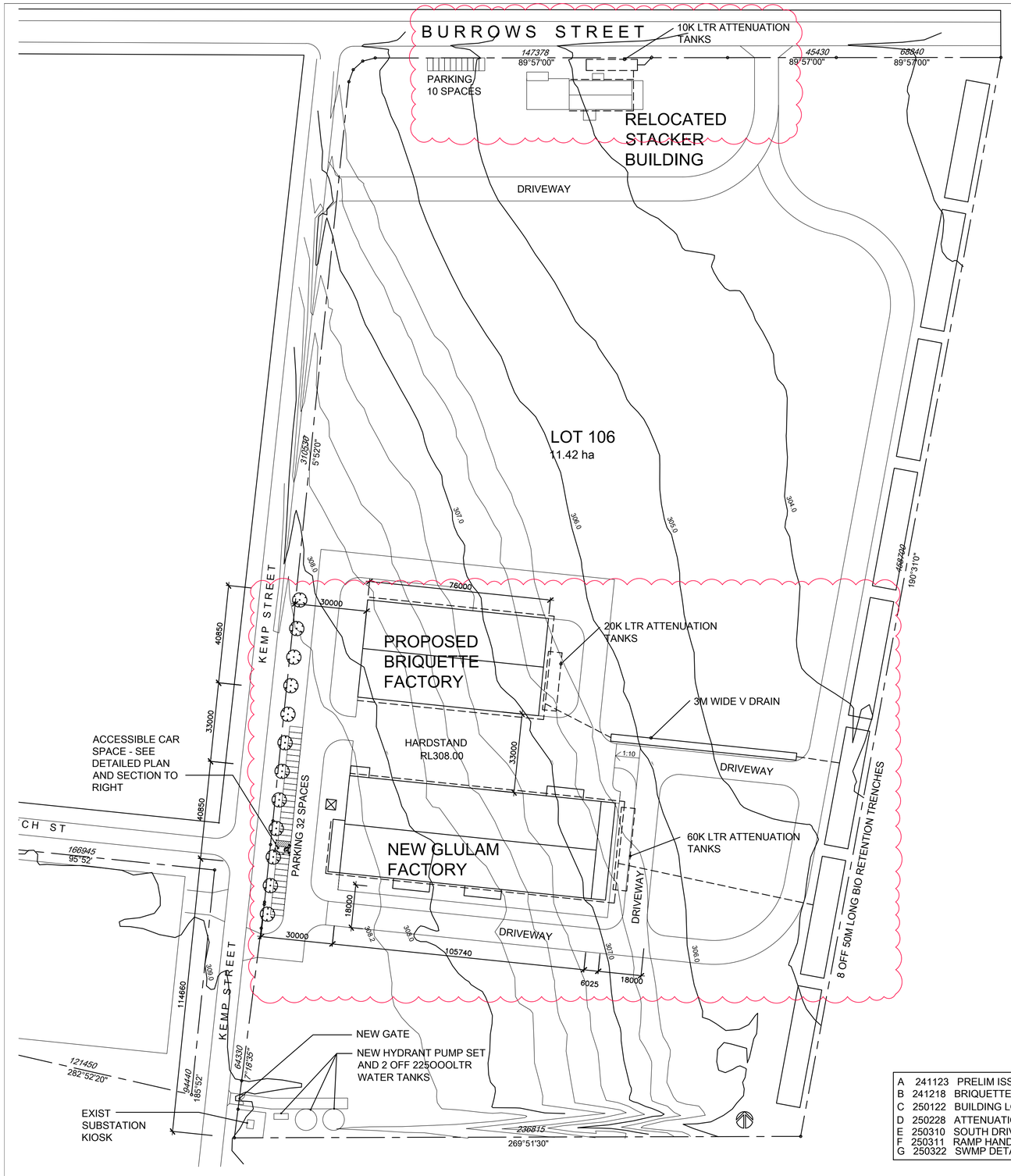

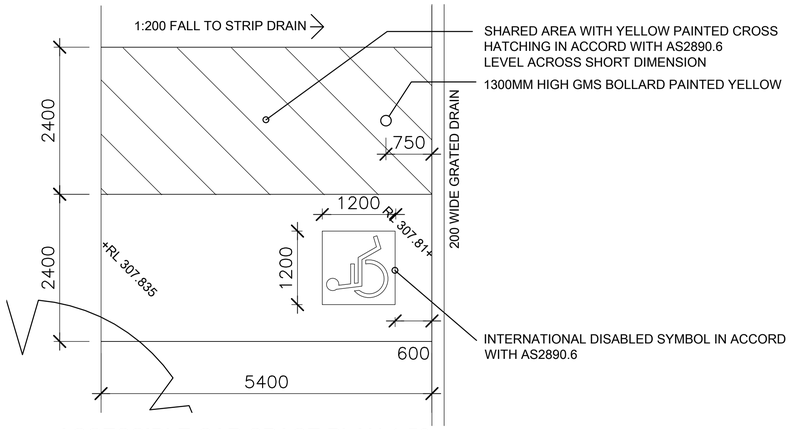

ACCESSIBLE CAR SPACE PLAN 1:50

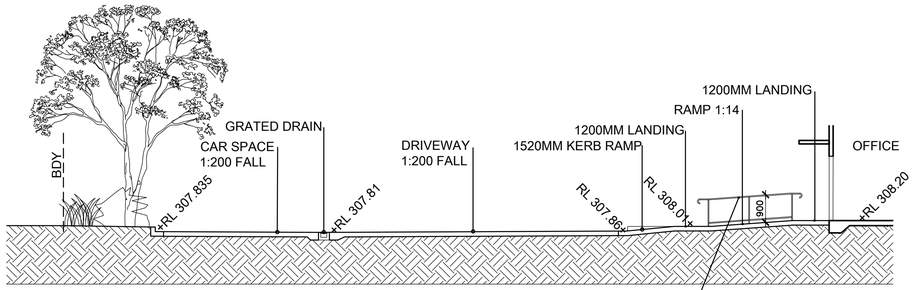

PATH FROM ACCESSIBLE CAR SPACE
TO ENTRY - LONG SECTION 1:100

LOCATION MAP

A	241123	PRELIM ISSUE
B	241218	BRIQUETTE BLDG ADDED
C	250122	BUILDING LOCATIONS ADJUSTED
D	250228	ATTENUATION TANKS ADDED, EAST ROAD SHIFTED
E	250310	SOUTH DRIVEWAY MOVED, ACCESSIBLE CARSPACE DOCUMENTED
F	250311	RAMP HANDRAILS ADDED
G	250322	SWMP DETAILS ADDED

New Glulam Factory and Offices

2-30 Kemp Street WONDAI QLD 4606

for PARKSIDE GROUP - TIMBER DIVISION

Job No 2024-03

SITE PLAN

DA01

250322 Rev G

November 2024

0 50 100 150

SCALE 1:1000 @ A1

SWELL ARCHITECTS
A: 12 Balkin Road Eumundi QLD 4562
M: 0414 574 555
E: matt@swellarchitects.com
R: Nominated Architect QLD No 4747

A	250117	PRELIM ISSUE
B	250131	BUILDING MOVED 2400 EAST
C	250204	GLULAM BLDG MOVED 10M SOUTH
D	250212	DOORS AND EXIT PATHS SHOWN
E	250328	MCU SUBMISSION, INDICATIVE EARTHWORK ADDED

A B C D E F G H I J K

BANK

30000 | 7500 | 7500 | 7500 | 7500 | 7500 | 75750 | 7500 | 7500 | 7500 | 7500 | 7500

1 2 3 4 5 6

8000 | 8000 | 8000 | 8000 | 8000 | 8000

40981

FIRE ENGINE ACCESS
RL 308.00

GRASS

GRASS

BOILER FUEL BIN

EXIT
FHR
ROLLER SHUTTER
EXIT WAY 1350 WIDE

DRYER

BOILERS X 3
RL 308.20
EXIT WAY 1200 WIDE

TEMPORARY STORAGE

MCC ROOM

EXHAUST
EXIT WAY 1350 WIDE
EXIT WAY 1000 WIDE

SAWDUST/CHIP BUNKER
RL 308.05

GRASS

FIRE ENGINE ACCESS
RL 308.00

2M WIDE LANDSCAPING

PELLET BAGGER

BRIQUETTE BAGGER

RL 308.20

PELLET PRESS

BRIQUETTE PRESS

BRIQUETTE PRESS

CHIP RAKE

EXIT WAY 1350 WIDE
FHR
ROLLER SHUTTER
EXIT

SAWDUST SILO

SAWDUST SILO

STORMWATER DRAIN

BUILDING FACE

21526

19302

CONCRETE HARDSTAND

18203

GRASS

DRIVEWAY

FIRE ENGINE ACCESS
RL 308.00

RL 308.00

CONCRETE HARDSTAND

SILO ON STAND

DUST EXTRACTION

CANOPY OVER
RAMP UP 1:20
ROLLER SHUTTER
DP
EXIT

APPROVED GLULAM FACTORY

DRIVEWAY

1 2 3 4 5 6 7

1:10

New Briquette Factory

2-30 Kemp Street WONDAI QLD 4606

for PARKSIDE GROUP - TIMBER DIVISION

NOT FOR CONSTRUCTION

Job No 2025-01

MCU APPLICATION
FACTORY FLOOR PLAN

DA02

250328 Rev E

January 2025

SCALE 1:200 @ A1

SWELL ARCHITECTS

A: 12 Balkin Road Eumundi QLD 4562
M: 0414 574 555
E: matt@swellarchitects.com
R: Nominated Architect QLD No 4747

A	250123	PRELIM ISSUE
B	250212	CHIP BUNKER ROOF ADDED, GLULAM MOVED 10M SOUTH
C	250217	BOILER BUNKER ROOF ADDED
D	250326	MCU APPLICATION

A B C D E F G H I J K

7500 7500 7500 7500 7500 7500 7500 7500 7500 7500

75750

1 2 3 4 5 6

8025 7940 7940 7940 8025

40849

2 DA05

1 DA05

FALL 6° KLIPLOK PROFILE METAL ROOF SHEET

FALL 6° KLIPLOK PROFILE METAL ROOF SHEET

FALL 6° KLIPLOK PROFILE METAL ROOF SHEET

FALL 6°

TRIMDEK ROOF OVER CHIP BUNKER

DP

SILO

SILO

SILO ON STAND

WORKSHOP

DRIVEWAY

APPROVED GLULAM FACTORY

PARKING

New Briquette Factory

2-30 Kemp Street WONDAI QLD 4606

for PARKSIDE GROUP - TIMBER DIVISION

NOT FOR CONSTRUCTION

Job No 2025-01

MCU APPLICATION

ROOF PLAN

DA03

250328 Rev D

January 2025

SCALE 1:200 @ A1

0 10 20 30

SWELL ARCHITECTS

A: 12 Balkin Road Eumundi QLD 4562
M: 0414 574 555
E: matt@swellarchitects.com
R: Nominated Architect QLD No 4747

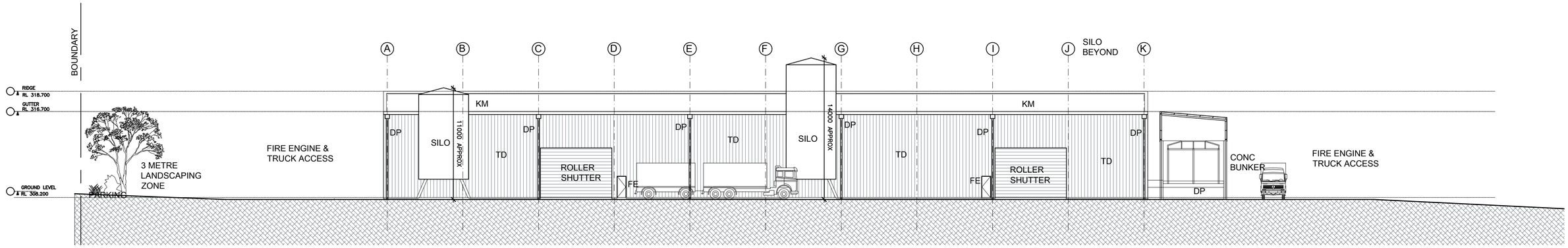

SOUTH ELEVATION

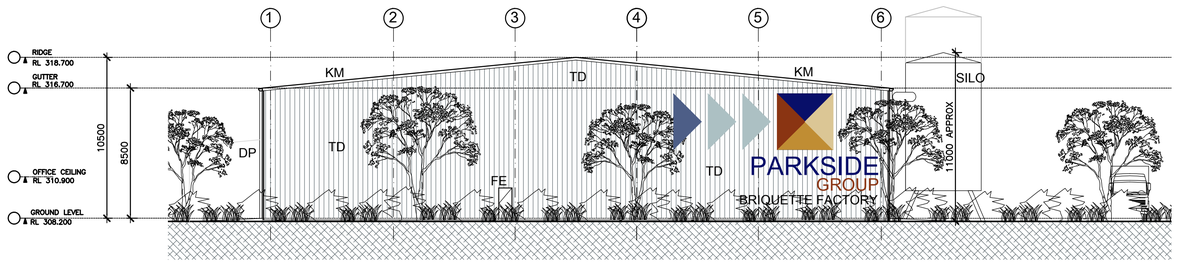

WEST ELEVATION

NOTE: WESTERN FACADE TO BE ENHANCED WITH POWDERCOAT ALUMINIUM PANELS UTILISING THE PARKSIDE CORPORATE COLOURS: BLUE, ORANGE AND YELLOW. COLOUR PANELS TO FUTURE DETAIL AS SHOWN ON SAMPLE BOARD TO BE PROVIDED

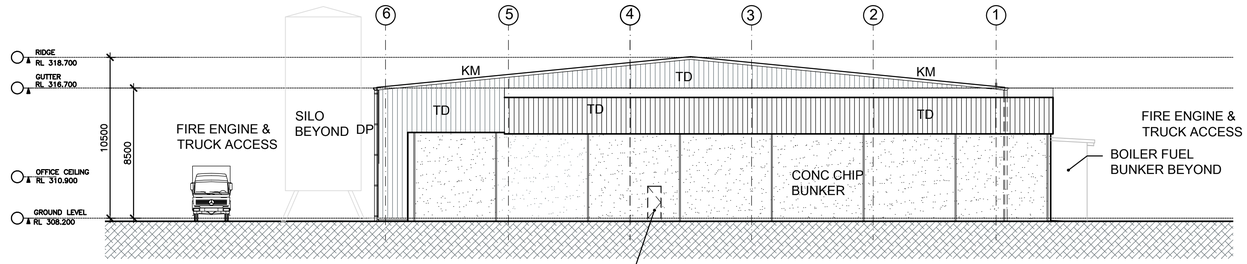

EAST ELEVATION

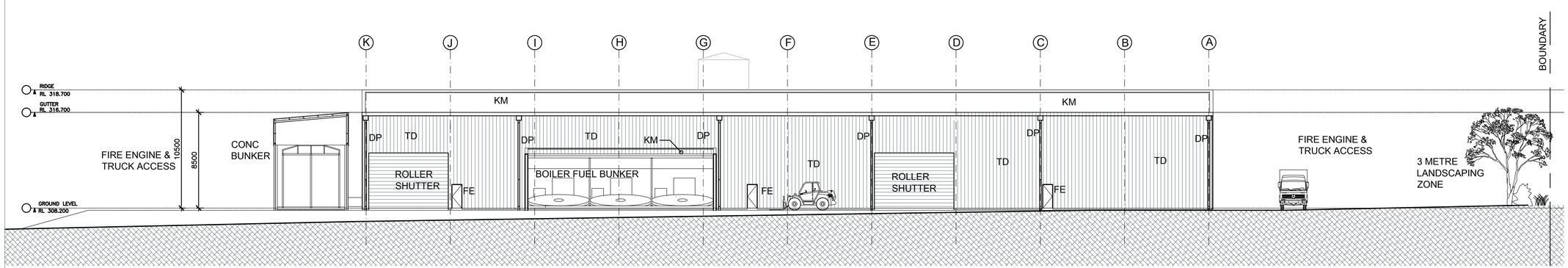

NORTH ELEVATION

MATERIALS LEGEND

TD	COLORBOND TRIMDEK WALL CLADDING
FE	FIRE EXIT DOOR
AW	ALUMINIUM SLIDING WINDOW
TW	TRANSLUCENT WALL SHEETING
FG	FIXED GLAZING
HD	SIDE HUNG GLASS DOOR
KM	COLORBOND KLIPLOK METAL DECK ROOFING
DP	COLORBOND DOWNPIPE (SUMP TO MAIN ROOF)
RS	ROLLER SHUTTER

New Briquette Factory

2-30 Kemp Street WONDAI QLD 4606

for PARKSIDE GROUP - TIMBER DIVISION

A	250212	PRELIM ISSUE
B	250214	SILO'S AND BOILER BUNKER AMENDED
C	250218	SILO HEIGHTS SHOWN
D	250304	SIGNAGE AMENDED
E	250328	MCU APPLICATION

NOT FOR CONSTRUCTION

Job No 2025-01

MCU APPLICATION ELEVATIONS

DA04

250328 Rev E

January 2025

0 10 20 30

SCALE 1:200 @ A1

SWELL ARCHITECTS

A: 12 Balkin Road Eumundi QLD 4562
M: 0414 574 555
E: matt@swellarchitects.com
R: Nominated Architect QLD No 4747

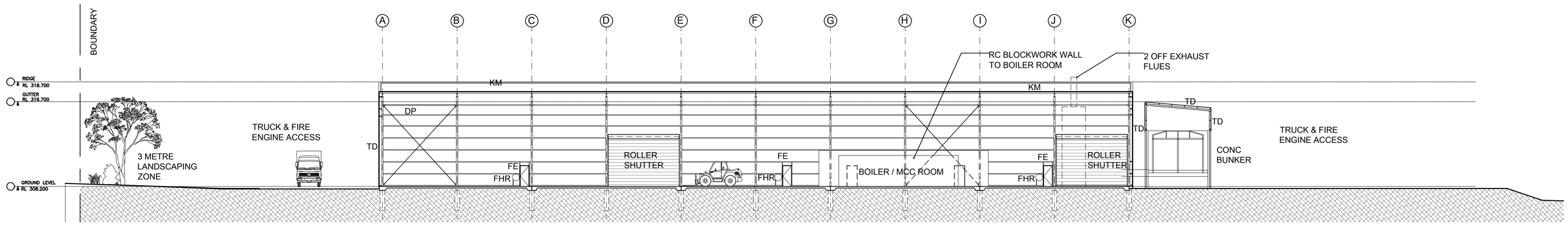

SECTION 1

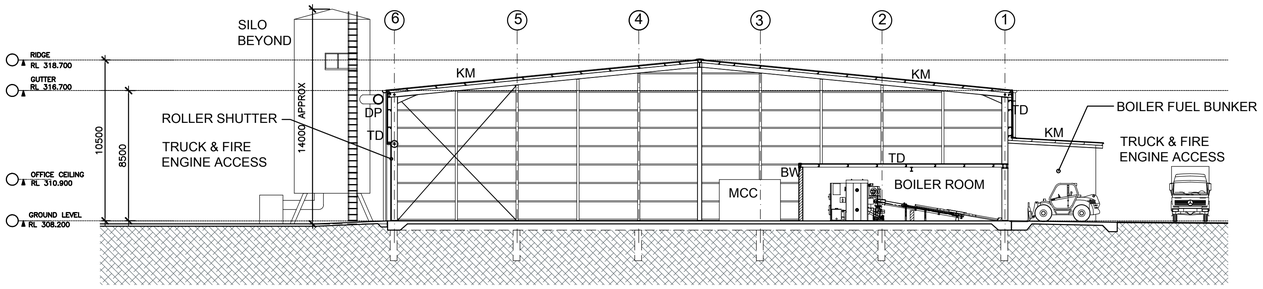

SECTION 2

MATERIALS LEGEND

TD	COLORBOND TRIMDEK WALL CLADDING
FE	FIRE EXIT DOOR
AW	ALUMINIUM SLIDING WINDOW
TW	TRANSLUCENT WALL SHEETING
FG	FIXED GLAZING
HD	SIDE HUNG GLASS DOOR
KM	COLORBOND KLIPLOK METAL DECK ROOFING
DP	COLORBOND DOWNPIPE (SUMP TO MAIN ROOF)
RS	ROLLER SHUTTER
BW	REINFORCED BLOCKWORK

NOTE: EQUIPMENT NOT SHOWN FOR CLARITY

New Briquette Factory

2-30 Kemp Street WONDAI QLD 4606

for PARKSIDE GROUP - TIMBER DIVISION

A	250213	PRELIM ISSUE
B	250214	BOILER ROOM AMENDED
C	250218	SILO HEIGHT SHOWN
D	250328	MCU SUBMISSION

NOT FOR CONSTRUCTION

MCU APPLICATION SECTIONS

Job No 2025-01

DA05

250328 Rev D

January 2025

0 10 20 30

SCALE 1:200 @ A1

SWELL ARCHITECTS

A: 12 Balkin Road Eumundi QLD 4562
M: 0414 574 555
E: matt@swellarchitects.com
R: Nominated Architect QLD No 4747

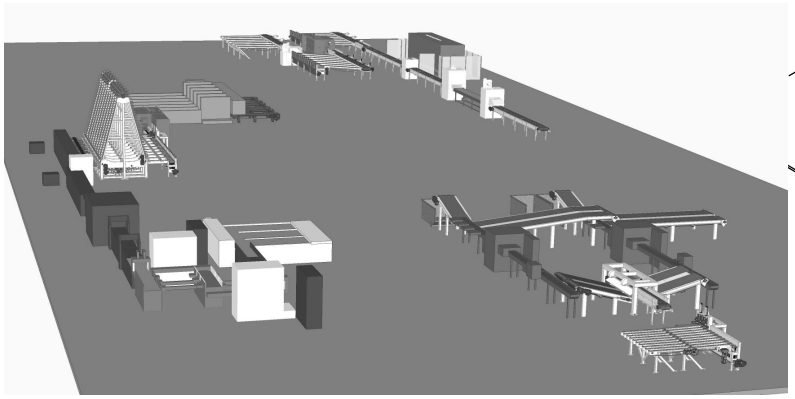

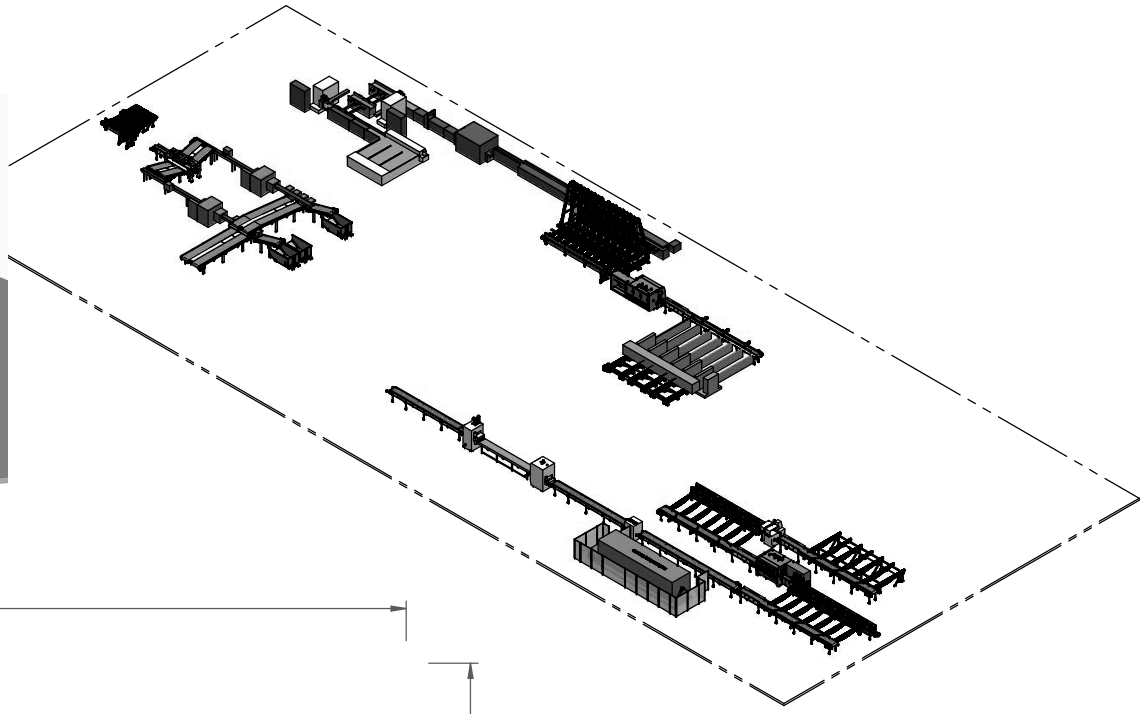

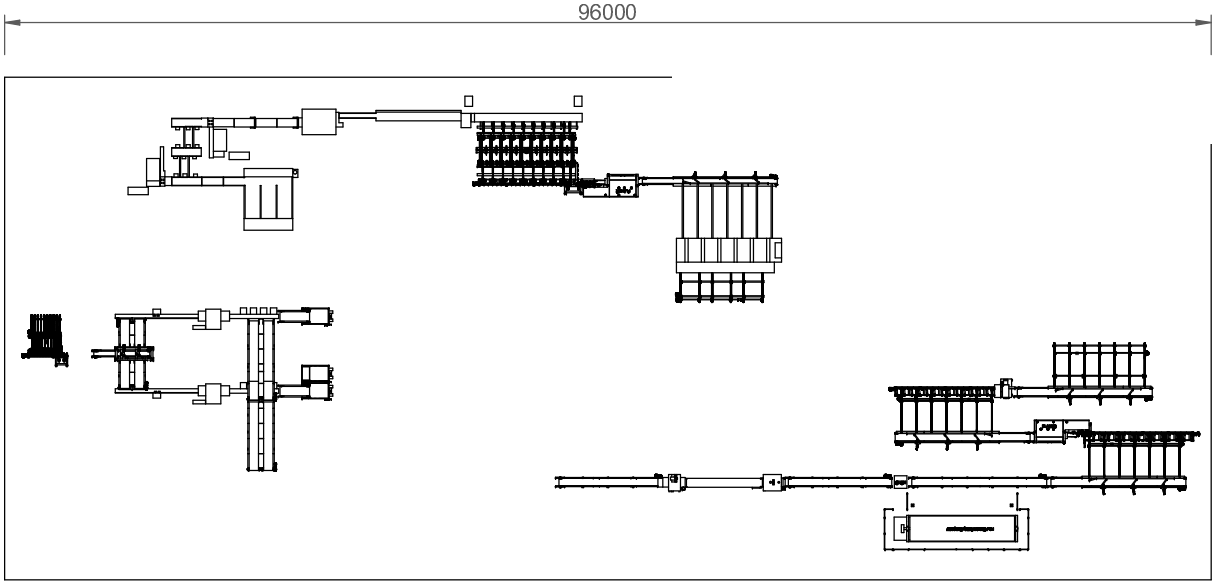

DOCKING LINE
FINGER JOINTER LINE
BEAM LINE

OZ TAG ENGINEERING
27 Hall Rd, Gympie
5482 7080

The information contained on this drawing sheet should be understood and interpreted in conjunction with all associated drawing sheets and model files.

LATEST REVISION	pract	1/06/2023	
DRAWN	pract	1/06/2023	
CHECKED			
APPROVED			

UNLESS OTHERWISE SPECIFIED DIMENSIONS ARE IN MILLIMETERS & TOLLERANCES ARE:
- 0 PL = 0.25 (Machined)
- 0 PL = 1.5 (Fabricated)
- 1 PL = 0.05
- 2 PL = 0.005 Angles 0 PL = 0.25°

A3 | DO NOT SCALE | SHEET 4 OF 5

CLIENT
PARKSIDE WONDAI
Commercial In Confidence.

PROJECT	WONDAI SITE DEVELOPMENT
DETAIL	WONDAI PROPOSED LAYOUT
DRG No	OZ-WON-23-06-01
REV	

FINGER JOINTING LINE
FJ01-Bin feeder
FJ02-Drier tower
FJ03-Rollcase
FJ04-Planer feeder
FJ05-Planer guide
FJ06-Short belt
FJ07-Oiler bypass belt
FJ08-Oiler carriage
FJ09-Stacker outfeed chains

BEAM LINE
BL01-Belt infeed
BL02-Belt beam loading
BL03-Belt kicker LH
BL04-Cross chain
BL05-Rollcase RH
BL06-Planer feeder
BL07-Belt kicker RH
BL08-Cross chain incline
BL09-Rollercase LH
BL10-Belt high kicker LH
BL11-Take off chain.
BL12-Vacuum stacker.

DOCKER LINE
DL01-Vacuum lifter
DL02-Infeed chain1
DL03-Rollercase
DL04-Planer feeder
DL05-Double sided kicker
DL06-Side belts.
DL07-Short incline belts.
DL08-Overhead belt
DL09-Outfeed belt

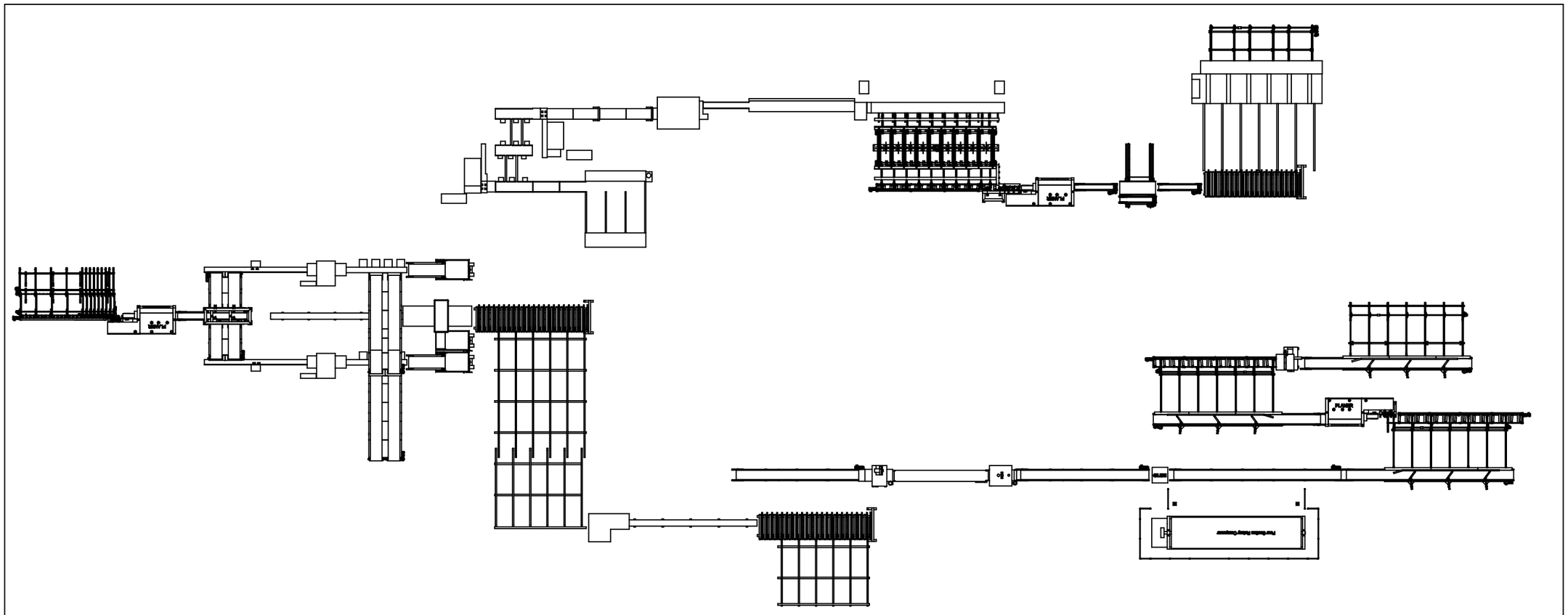

OZ-TAC ENGINEERING
27 Hall Rd, Gympie
5482 7080

The information contained on this drawing sheet should be understood and interpreted in conjunction with all associated drawing sheets and model files.

LATEST REVISION	pract	7/06/2023
DRAWN	pract	4/05/2023
CHECKED		
APPROVED		

UNLESS OTHERWISE SPECIFIED DIMENSIONS ARE IN MILLIMETERS & TOLLERANCES ARE
- 0 PL ± 0.25 (Machined)
- 0 PL ± 1.5 (Fabricated)
- 1 PL ± 0.05
- 2 PL ± 0.005

Angles 0 PL ± 0.25°

A3

DO NOT SCALE

SHEET 1 OF 2

CLIENT
PARKSIDE WONDAI
Commercial In Confidence.

PROJECT: WONDAI GLUE SHED
DETAIL: LAYOUT
DRG No: **PRELIMINARY**
REV:

Drawing Pack Contents	
Contents	**Sheet #**
Assemblies	
Weldments	
Sections	
Plates & Foldings	
Machined Parts	
Buy in Components	
Finishing	

FINGER JOINTING LINE

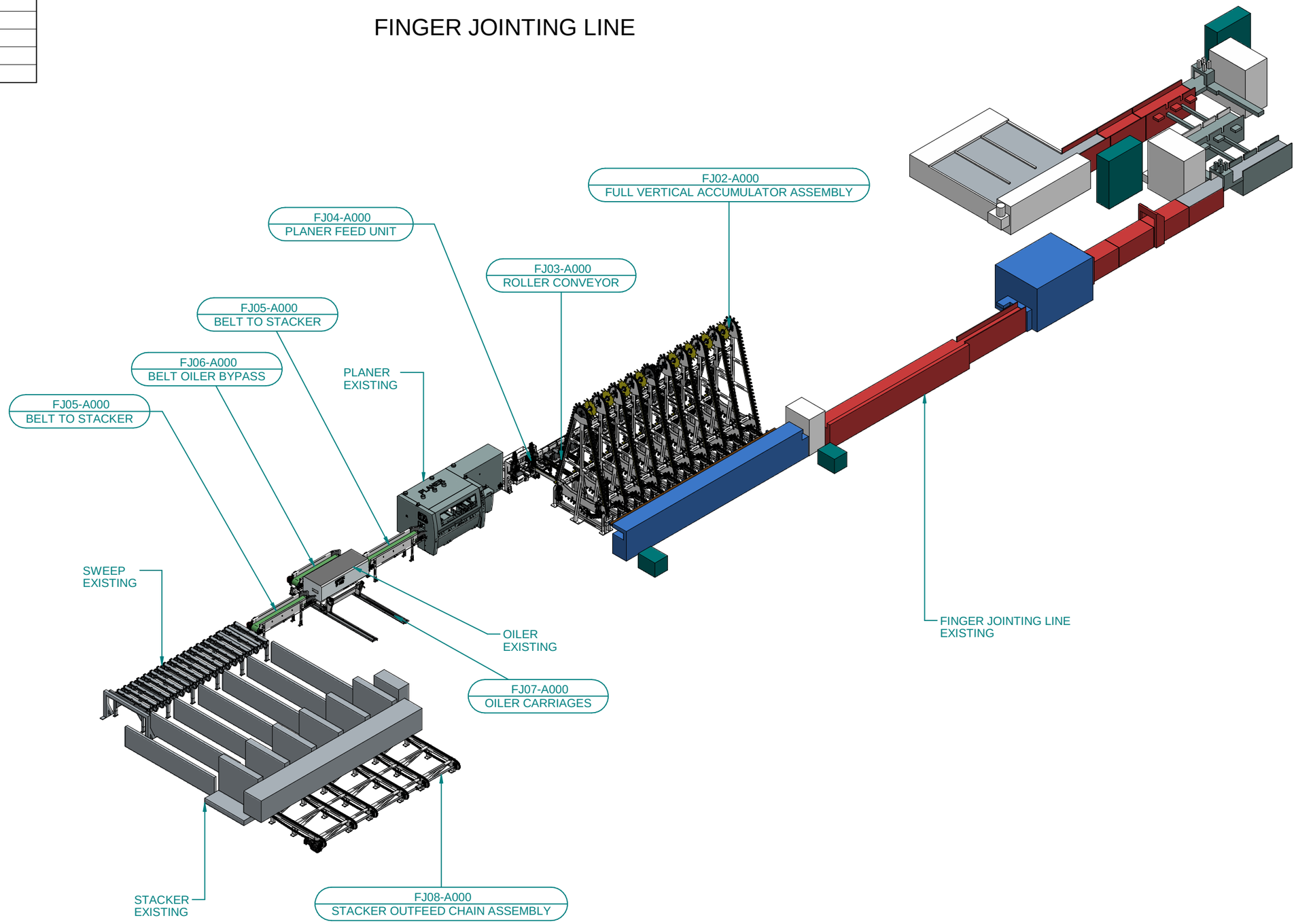

Revision History			
REV	**Description**	**Date**	**Approved**
0			

OZ-TAC ENGINEERING
27 Hall Rd, Gympie
5482 7080

The information contained on this drawing sheet should be understood and interpreted in conjunction with all associated drawing sheets and model files.

LATEST REVISION	Selwyn	14/07/2023
DRAWN	Selwyn	23/03/2023
CHECKED		
APPROVED		

UNLESS OTHERWISE SPECIFIED DIMENSIONS ARE IN MILLIMETERS & TOLLERANCES ARE
- 0 PL ± 0.25 (Machined)
- 0 PL ± 1.5 (Fabricated)
- 1 PL ± 0.05
- 2 PL ± 0.005
Angles 0 PL ± 0.25°

A3

DO NOT SCALE

SHEET 1 OF 2

CLIENT
PARKSIDE WONDAI
Commercial In Confidence.

PROJECT	GLUE LINES
SUBJECT	FINGER JOINTING LINE
DRG No	FJ00
REV	

Assembly BOM

Item #	Title	Document #	Qty	Category	Material	Material Desc	Fabrication	Finish	Mass (Item)
1	PLANER (EXISTING)		1						0.000 kg
2	OILER MACHINE (EXISTING)		1						0.000 kg
3	FINGER JOINT LINE (EXISTING		1						0.000 kg
4	STACKER (EXISTING)		1						0.000 kg
5	SWEEP (EXISTING)		1						0.000 kg
6	FULL VERTICAL ACCUMULATOR ASSEMBLY	FJ02-A000	1	Assembly					9408.273 kg
7	ROLLER CONVEYOR	FJ03-A000	1	Assembly					854.905 kg
8	PLANER FEED UNIT	FJ04-A000	1	Assembly					614.528 kg
9	BELT TO STACKER	FJ05-A000	2	Assembly					257.092 kg
10	BELT OILER BYPASS	FJ06-A000	1	Assembly					236.499 kg
11	OILER CARRIAGES	FJ07-A000	1						684.651 kg
12	STACKER OUTFEED CHAIN ASSEMBLY	FJ08-A000	1	Assembly					1932.490 kg

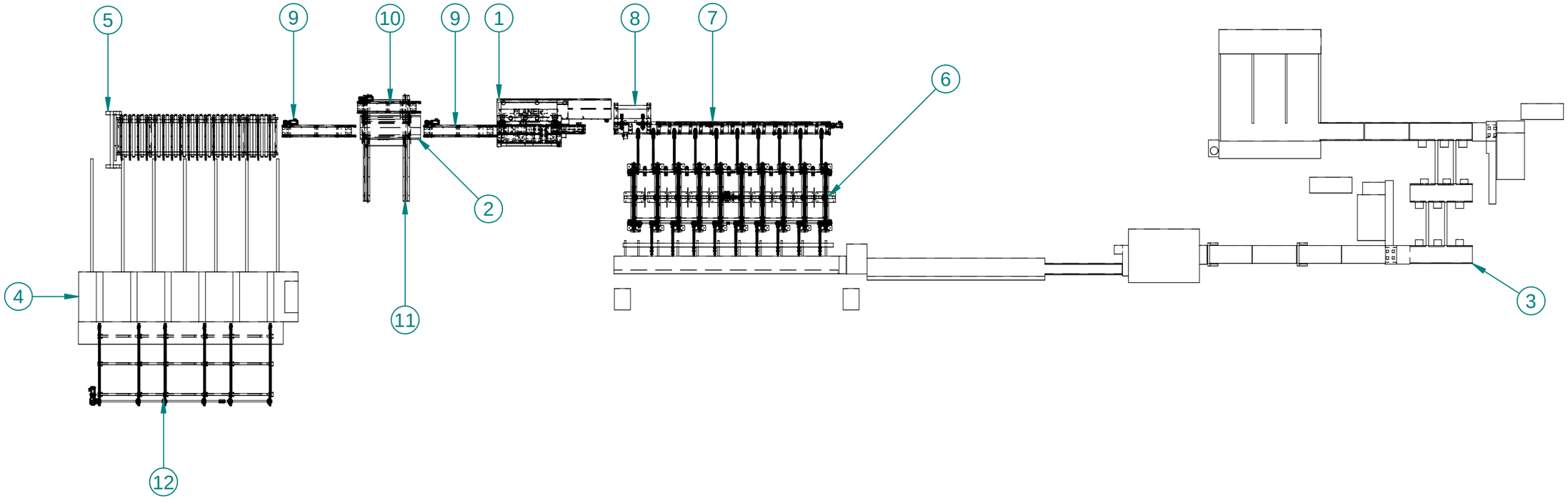

OZ-TAC ENGINEERING
27 Hall Rd, Gympie
5482 7080

The information contained on this drawing sheet should be understood and interpreted in conjunction with all associated drawing sheets and model files.

LATEST REVISION	Selwyn	14/07/2023
DRAWN	Selwyn	23/03/2023
CHECKED		
APPROVED		

UNLESS OTHERWISE SPECIFIED DIMENSIONS ARE IN MILLIMETERS & TOLLERANCES ARE
- 0 PL ± 0.25 (Machined)
- 0 PL ± 1.5 (Fabricated)
- 1 PL ± 0.05
- 2 PL ± 0.005 Angles 0 PL ± 0.25°

DO NOT SCALE

A3

SHEET 2 OF 2

CLIENT **PARKSIDE WONDAI**

Commercial In Confidence.

PROJECT	GLUE LINES
SUBJECT	FINGER JOINTING LINE
DRG No	FJ00
REV	

Drawing Pack Contents	
Contents	**Sheet #**
Assemblies	
Weldments	
Sections	
Plates & Foldings	
Machined Parts	
Buy in Components	
Finishing	

WONDAI BEAM LINE

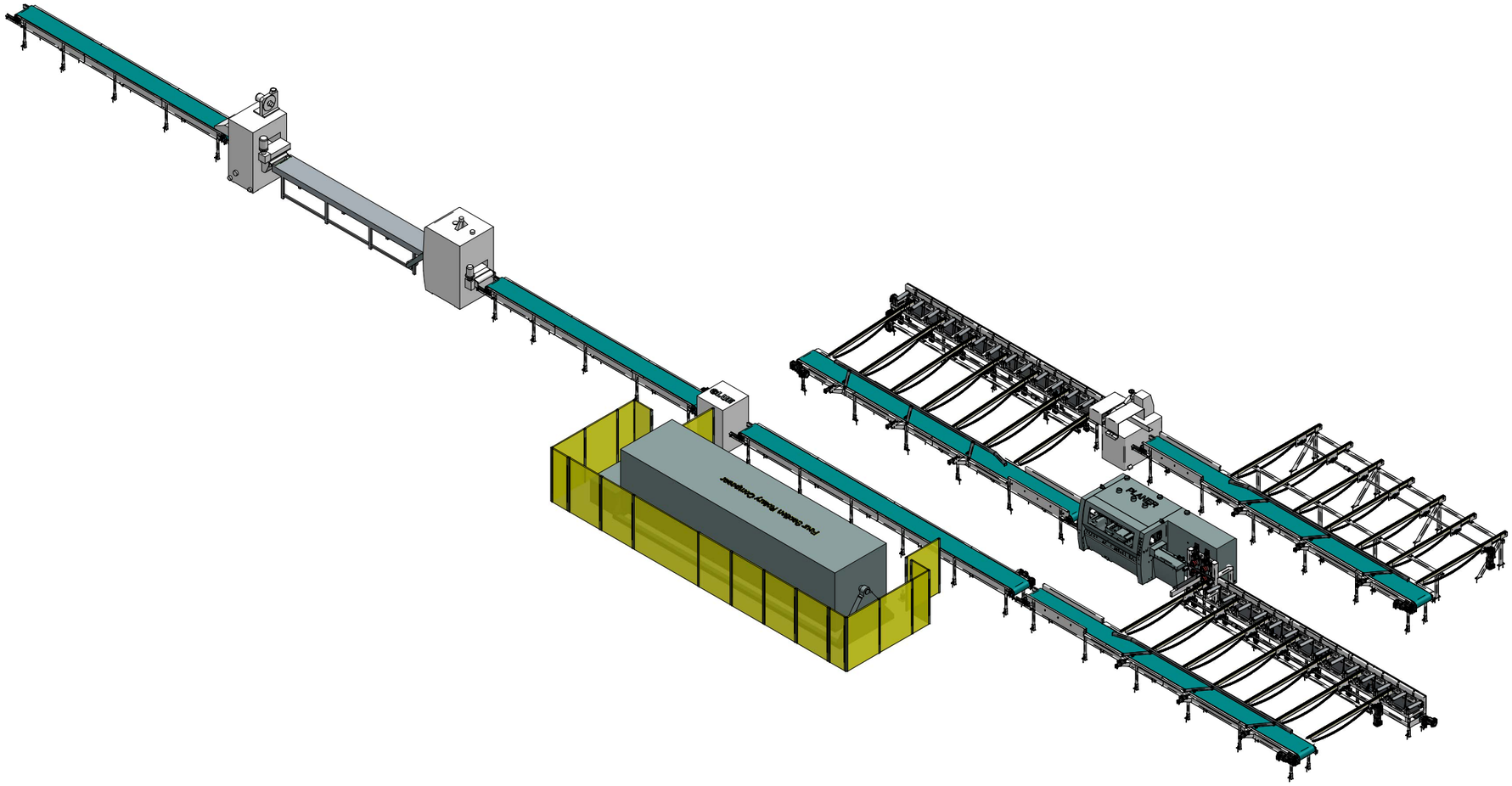

Revision History			
REV	**Description**	**Date**	**Approved**
0			

OZ-TAC ENGINEERING
27 Hall Rd, Gympie
5482 7080

The information contained on this drawing sheet should be understood and interpreted in conjunction with all associated drawing sheets and model files.

LATEST REVISION	Selwyn	3/08/2023
DRAWN	Selwyn	3/08/2023
CHECKED		
APPROVED		

UNLESS OTHERWISE SPECIFIED DIMENSIONS ARE IN MILLIMETERS & TOLLERANCES ARE
- 0 PL ± 0.25 (Machined)
- 0 PL ± 1.5 (Fabricated)
- 1 PL ± 0.05
- 2 PL ± 0.005 Angles 0 PL ± 0.25°

A3

DO NOT SCALE

SHEET 1 OF 2

CLIENT

PARKSIDE WONDAI

Commercial In Confidence.

PROJECT	GLUE LINES
SUBJECT	BEAM LINE LAYOUT
DRG No	BL00-A000
REV	

Assembly BOM

Item #	Title	Document #	Qty	Category	Material	Material Desc	Fabrication	Finish	Mass (Item)
1	BOTTOM SANDER	EXISTING	1						0.000 kg
2	TOP SANDER	EXISTING	1						0.000 kg
3	SANDER CONVEYOR	EXISTING	1						0.000 kg
4	GLUE APPLICATOR	EXISTING	1						0.000 kg
5	ROTARY PRESS	EXISTING	1						0.000 kg
6	PLANER	EXISTING	1						0.000 kg
7	UP CUT SAW	EXISTING	1						0.000 kg
8	BELT INFEED	BL01-A000	2	Assembly					680.182 kg
9	BELT BEAM LOADING	BL02-A000	1	Assembly					853.372 kg
10	BELT KICKER HIGH LH	BL10-A000	1	Assembly					1118.540 kg
11	TAKE OFF CHAIN	BL11-A000	1	Assembly					1082.248 kg
12	BELT KICKER LH	BL03-A000	1	Assembly					1118.540 kg
13	CROSS CHAIN	BL04-A000	1	Assembly					948.434 kg
14	ROLLCASE RH	BL05-A000	1	Assembly					1136.216 kg
15	PLANER FEED UNIT	BL06-A000	1	Assembly					578.770 kg
16	BELT KICKER RH	BL07-A000	1	Assembly					1118.540 kg
17	ROLLCASE LH	BL09-A000	1	Assembly					1082.768 kg
18	CROSS CHAIN INCLINE	BL08-A000	1	Assembly					948.583 kg

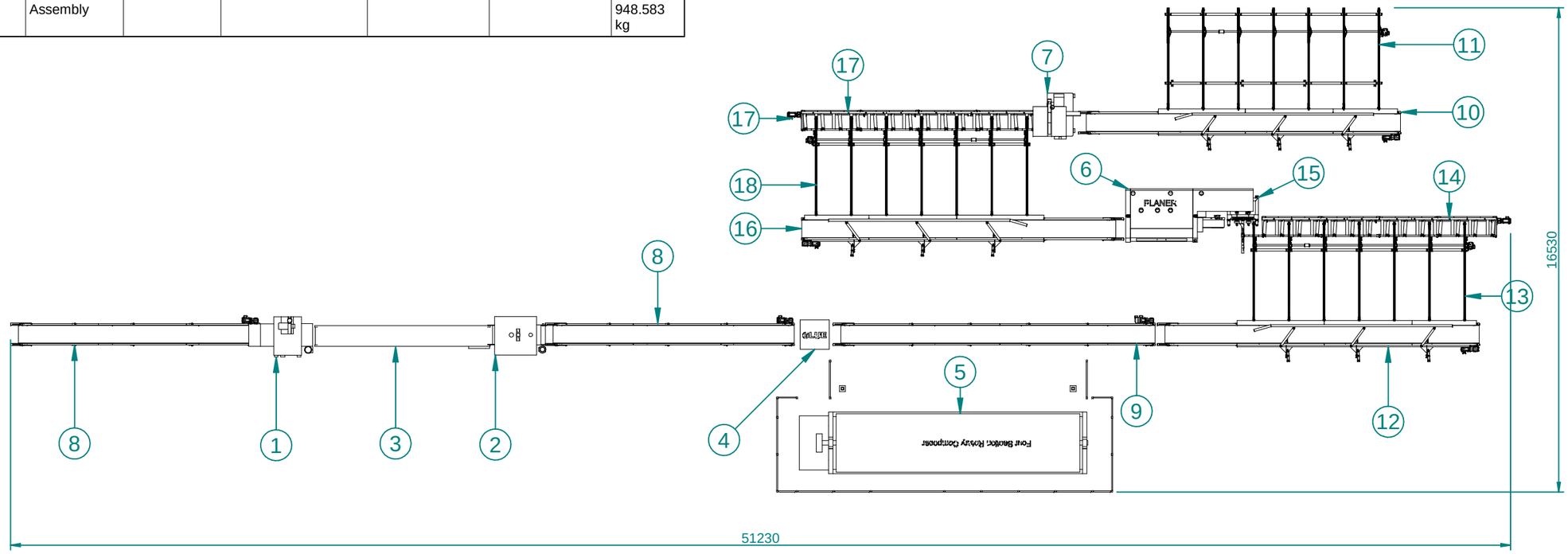

OZ-TAC ENGINEERING 27 Hall Rd, Gympie 5482 7080	LATEST REVISION	Selwyn	3/08/2023	CLIENT PARKSIDE WONDAI *Commercial In Confidence.*
	DRAWN	Selwyn	3/08/2023	
	CHECKED			PROJECT: GLUE LINES
	APPROVED			SUBJECT: BEAM LINE LAYOUT
The information contained on this drawing sheet should be understood and interpreted in conjunction with all associated drawing sheets and model files.	UNLESS OTHERWISE SPECIFIED DIMENSIONS ARE IN MILLIMETERS & TOLLERANCES ARE - 0 PL ± 0.25 (Machined) - 0 PL ± 1.5 (Fabricated) - 1 PL ± 0.05 - 2 PL ± 0.005 Angles 0 PL ± 0.25°	A3	DO NOT SCALE SHEET 2 OF 2	DRG No: BL00-A000 REV

Drawing Pack Contents	
Contents	**Sheet #**
Assemblies	
Weldments	
Sections	
Profile Cutting	
Foldings	
Machined Parts	
Buy in Components	
Finishing	

DOCKER LINE

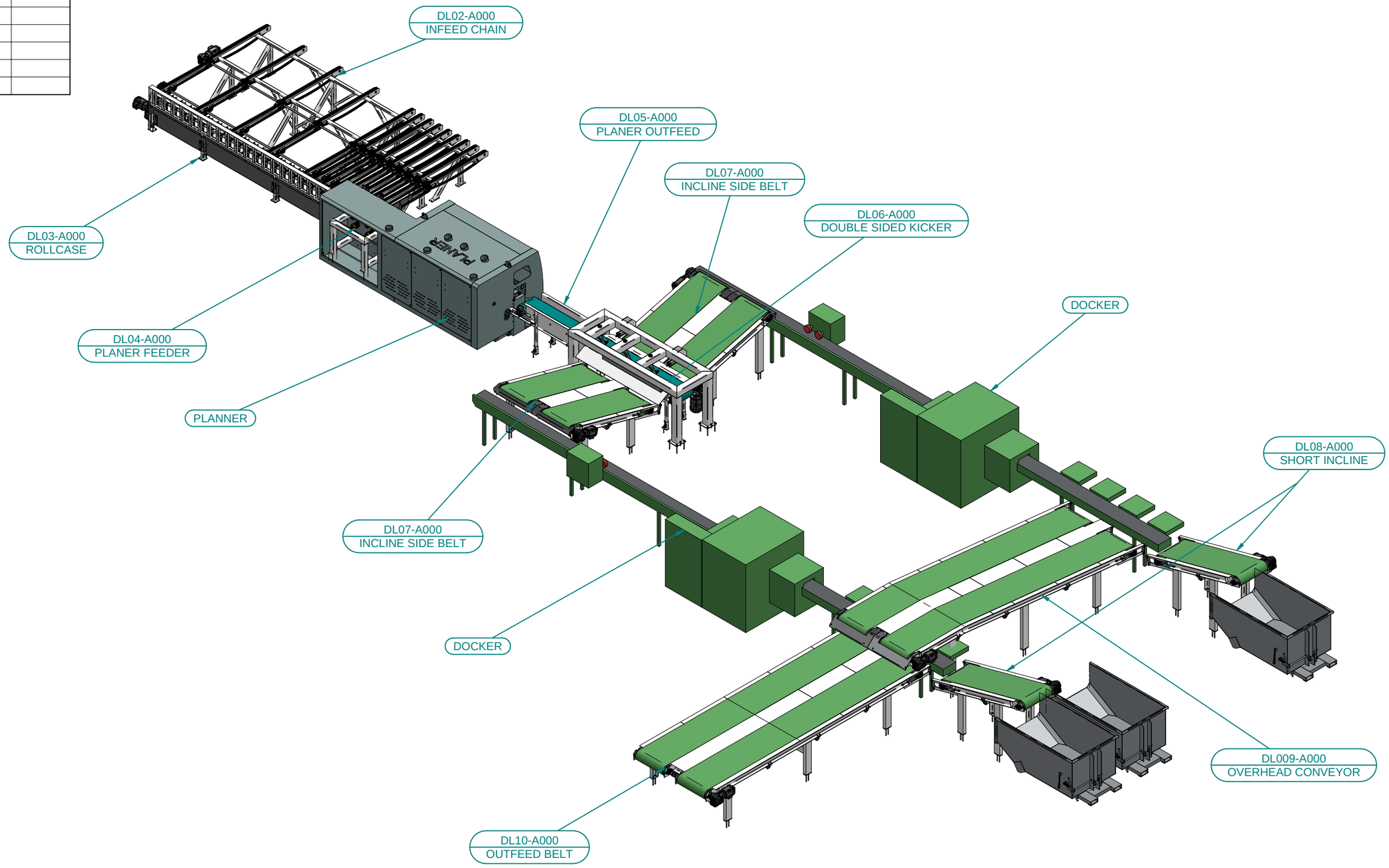

Revision History			
REV	**Description**	**Date**	**Approved**
0			

Quality:	OZ-TAC ENGINEERING 27 Hall Rd, Gympie 5482 7080	LATEST REVISION	Johnathan 4/08/2023
1		DRAWN	Johnathan 4/08/2023
2		CHECKED	
3	*The information contained on this drawing sheet should be understood and interpreted in conjunction with all associated drawing sheets and model files.*	APPROVED	

UNLESS OTHERWISE SPECIFIED DIMENSIONS ARE IN MILLIMETERS & TOLLERANCES ARE
- 0 PL ± 0.25 (Machined)
- 0 PL ± 1.5 (Fabricated)
- 1 PL ± 0.05
- 2 PL ± 0.005
Angles 0 PL ± 0.25°

A3

DO NOT SCALE

SHEET 1 OF 2

CLIENT: **PARKSIDE - WONDAI**

Commercial In Confidence.

PROJECT:

DETAIL: **DOCKING LINE**

DRG No: **DL00-DOCKING LINE** REV: **0**

ASSEMBLY BOM

Item #	Title	Document #	Qty	Category	Material	Material Desc	Fabrication	Cut Length	Finish	Mass (Item)
5	Docker		1	Reference						0.000 kg
4	Docker		1	Reference						0.000 kg
11			1	Reference						0.000 kg
12*	-		1							0.000 kg
9	Tipper Bin	-	3	Assembly						0.000 kg
14	INFEED CHAIN	DL02-A000	1							0.000 kg
15	ROLLCASE	DL03-A000	1							0.000 kg
13	FEEDER ASSEMBLY	DL04-A000	1				Assembly			0.000 kg
1	PLANER OUTFEED	DL05-A000	1	Assembly						0.000 kg
2	DOUBLE SIDED KICKER	DL06-A000	1	Assembly						638.216 kg
3	INCLINE SIDE BELT	DL07-A000	2	Assembly						0.000 kg
8	SHORT INCLINE BELT	DL08-A000	2	Assembly						0.000 kg
6	OVERHEAD BELT	DL09-A000	1	Assembly						0.000 kg
7	OUTFEED BELT	DL10-A000	1	Assembly						0.000 kg

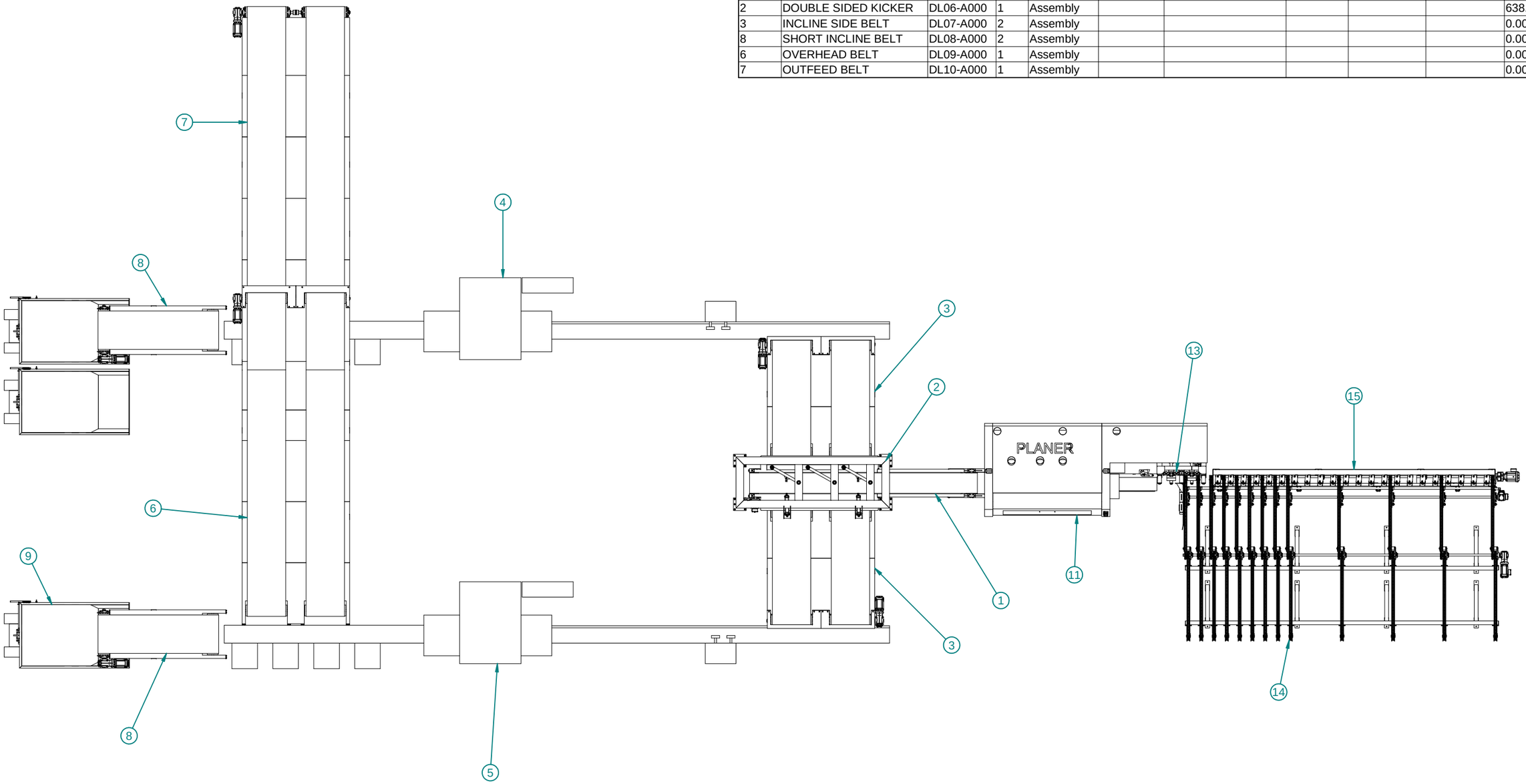

Quality:
1
2
3

OZ-TAC ENGINEERING
27 Hall Rd, Gympie
5482 7080

The information contained on this drawing sheet should be understood and interpreted in conjunction with all associated drawing sheets and model files.

LATEST REVISION	Johnathan	4/08/2023
DRAWN	Johnathan	4/08/2023
CHECKED		
APPROVED		

UNLESS OTHERWISE SPECIFIED DIMENSIONS ARE IN MILLIMETERS & TOLLERANCES ARE
- 0 PL ± 0.25 (Machined)
- 0 PL ± 1.5 (Fabricated)
- 1 PL ± 0.05
- 2 PL ± 0.005

Angles 0 PL ± 0.25°

A3

DO NOT SCALE

SHEET 2 OF 2

CLIENT
PARKSIDE - WONDAI
Commercial In Confidence.

PROJECT

DETAIL: DOCKING LINE

DRG No: DL00-DOCKING LINE

REV: 0

Appendix B Woodchip Boiler Specifications

T4e

WOOD CHIP BOILER

- Integrated particle separator (electrostatic precipitator) available as an option
- Online boiler control via app
- 7" touch display with LED status display

ENERGIE GENIE
ENERGIESPARMESSE 2018

PLUS X AWARD
honoured as:
BEST PRODUCT OF THE YEAR 2019

BETTER HEATING

INNOVATIVE AND CONVENIENT

fröling

ENVIRONMENTALLY RESPONSIBLE HEATING, ECONOMICALLY ATTRACTIVE

Wood chips are a local and environmentally-friendly fuel which is not subject to the crises and fluctuations of the market. Furthermore, wood chip production provides jobs for local residents.

That is why wood chip is the perfect fuel, not just from an economic perspective but also from an environmental point of view. The quality class is determined by the type of wood used.

For sixty years Froling has specialised in the efficient use of wood as a source of energy. Today the name Froling stands for modern biomass heating technology. Froling firewood, wood chip and pellet boilers are successfully in operation all over Europe. All of our products are manufactured in our factories in Austria and Germany. Froling's extensive service network ensures that we can handle all enquiries quickly.

GUARANTEED QUALITY AND RELIABILITY FROM AUSTRIA

- International pioneer in technology and design
- Sophisticated fully automatic operation
- Excellent environmental compatibility
- Environmentally responsible energy efficiency
- Renewable and CO_2-neutral fuel
- Ideal for all types of house
- Up to 5 year Froling-waranty (subject to warranty conditions)

User-friendly, compact, economical and safe:
The new T4e from Froling meets all your needs.

With the silicon carbide combustion chamber, the T4e ensures a **high level of efficiency** (up to 96.3%) with **very low emissions**. Well-planned use of energy-saving EC drives ensures **extremely low energy consumption**.

Thanks to its modular construction and compact dimensions, the Froling T4e is particularly easy to position and install. The entire boiler comes fully assembled, electrically wired and tested.

Particular attention was paid to energy efficiency, durability and stability during the development of the T4e. The T4e consumes very little electricity during operation, keeping the operating costs down. This priority was clearly confirmed when the boiler was awarded the EnergieGenie prize.

The **"EnergieGenie Innovation Prize"** of the Federal Ministry of Agriculture, Forestry, Environment and Water Management and the State of Upper Austria recognises new products according to the criteria of innovation, energy savings and the degree of innovation.

The **"Plus X Award"** honours high-quality innovations that make life simpler and more enjoyable while respecting the environment. Froling's T4e wood chip boiler stood out in the categories for **innovation, high quality, ease of use, functionality** and **ecology**.

T4e WOOD CHIP BOILER
SYSTEMATIC CONVENIENCE

Flue pipe also available with rear connection (optional)

Speed-controlled, highly efficient EC induced draught fan for lowest power consumption

Optional integrated particle separator (electrostatic precipitator)

Volume-optimised Ø 200 mm twin-chamber rotary valve for burn back protection

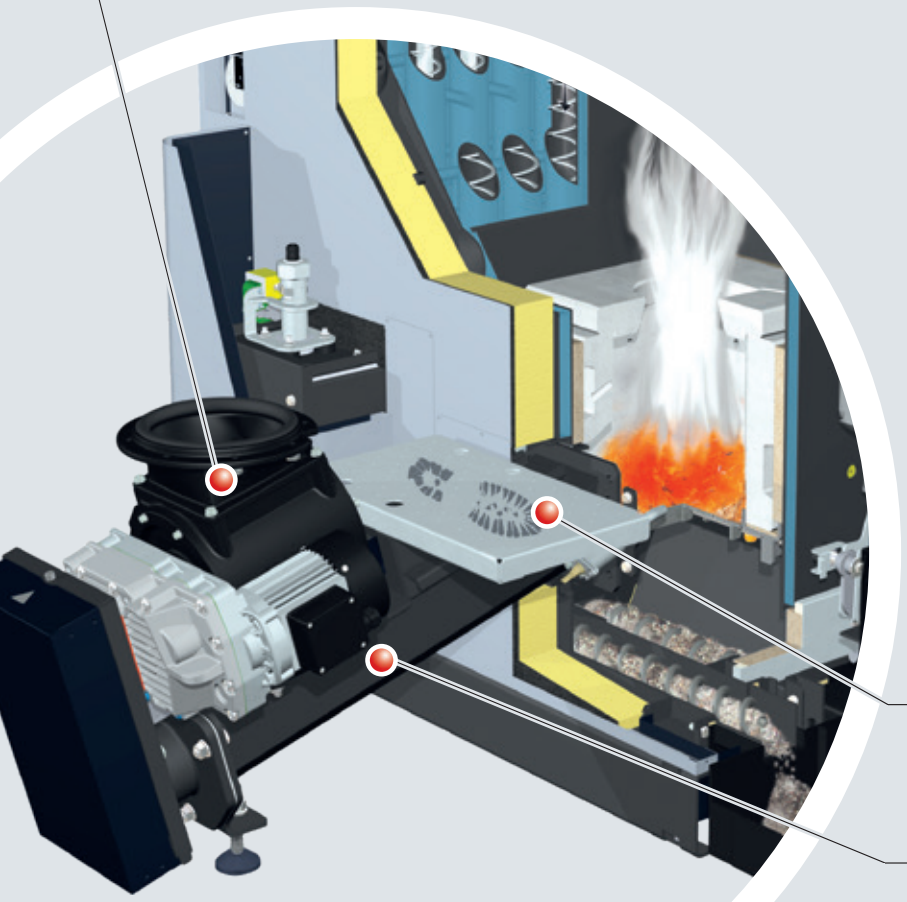

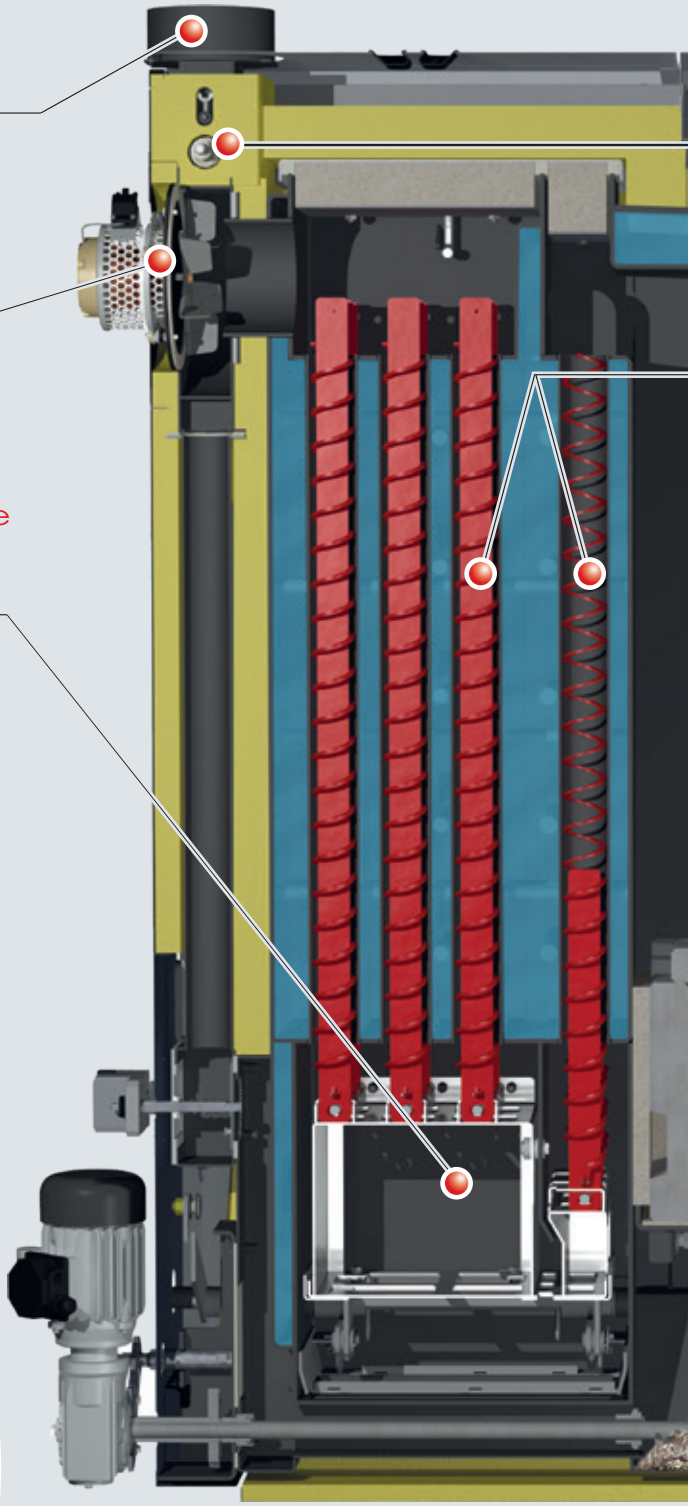

Sturdy foot step for easy maintenance and assembly

Stoker with large Ø100 mm screw and Ø150 mm screw from 200/250 kW

NEW!
7“ touch display with
LED status illumination

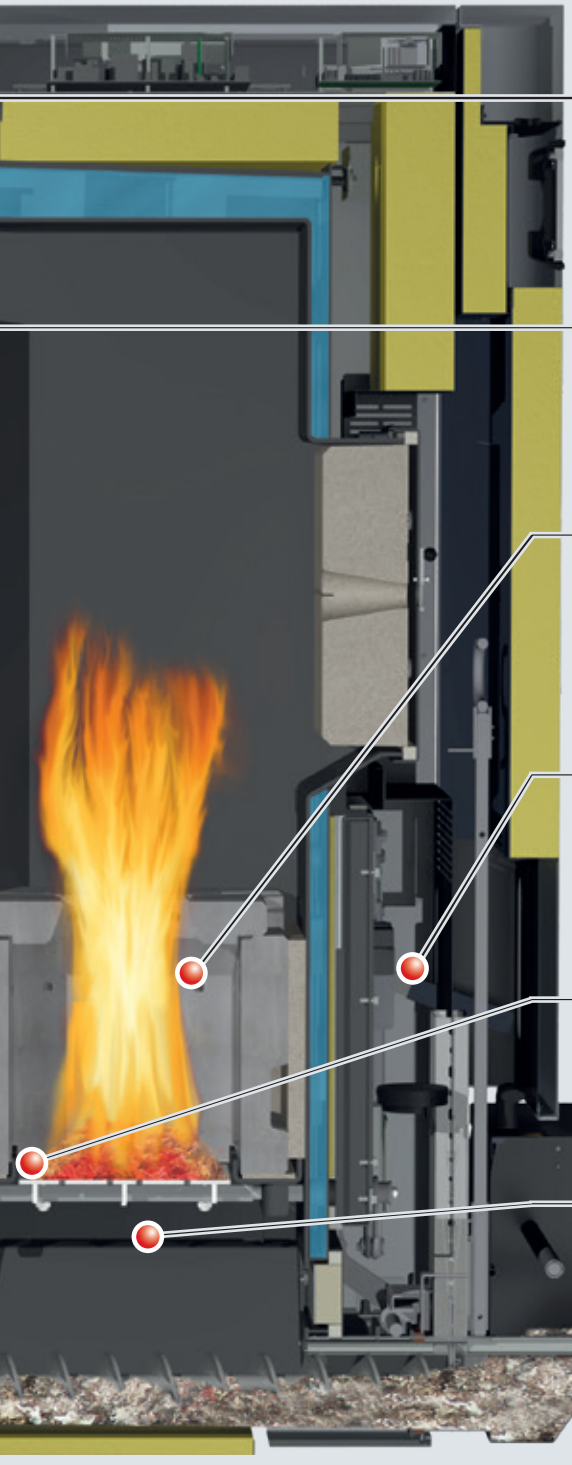

Lambda probe for optimum fuel adjustment

Fully automatic cleaning of all heat exchanger pipes (starting from the first pass) by means of turbulators (mechanical drive in the “cold” area)

Optimized silicon carbide combustion chamber for lowest emissions and a long service life

110° tipping grate with 900N drive for optimal grate cleaning

Silent, energy-efficient ceramic igniter with function monitor

Underpressure-controlled combustion with sensorless bed of embers monitor

Fully automatic ash removal with energysaving combi drive (common drive for heat exchanger and combustion chamber ash screw) to large-sized ash containers

FGR (flue gas recirculation) prepared in the boiler, motor and connecting pipe for activation available as an option

WELL PLANNED HOME
FOR MORE CONVENIENCE

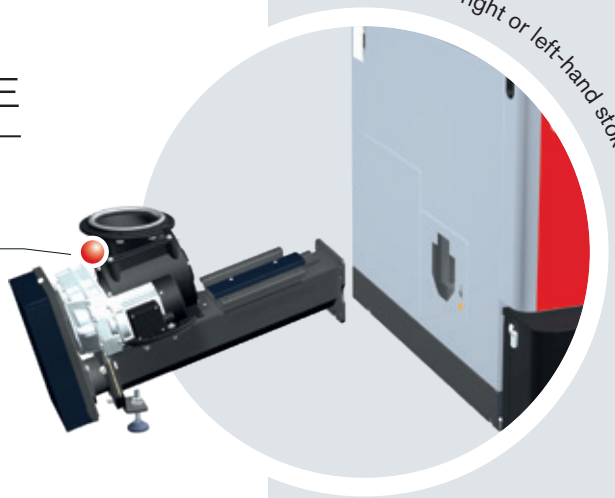

Easy to assemble on site

The T4e is supplied assembled and wired, you just need to fit the stoker unit and connect the chosen discharge system to the rotary valve. This saves time and money. Thanks to the well-planned layout of the units and its compact design, the T4e can also be used in very confined spaces.

Advantages:
- Quick installation
- Pre-wired
- Stoker unit can be ordered on the left or right as desired
- Return temperature control already integrated (ex works)

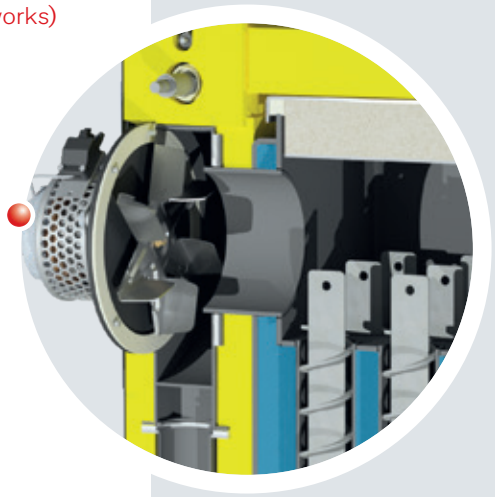

Speed regulated EC induced draught fan

The speed-regulated EC induced draught fan ensures the exact air quantity for combustion. As the induced draught fan is speed-regulated, it stabilises combustion throughout and adjusts the air quantity to the output of the respective material. Working together with the lambda control, it ensures optimum combustion conditions. The EC induced draught fan has a significantly higher efficiency than conventional induced draught fans with AC motors. This results in significant power savings, especially in partial load conditions.

Advantages:
- Maximum ease of use
- Continuous optimisation of combustion
- Up to 40% less power consumption

Precise primary and secondary air control

Combustion in the T4e is controlled by underpressure. Combined with the EC induced draught fan, this guarantees extremely high operating safety. The innovative control of air distribution in the combustion zone is a new feature. Primary and secondary air are optimally adjusted to the conditions in the combustion chamber with only one actuator. This, combined with the lambda controller which comes as standard, ensures that emissions are kept to a minimum.

Fast, energy-saving ignition

The silent ceramic igniter ensures safe and energy-saving ignition of the fuel. Thanks to the hot combustion zone, after short periods in idle mode the fuel is automatically reignited by the residual embers. It is only necessary to start the igniter after longer combustion pauses.

Advantages:
- Silent ceramic igniter for reliable ignition
- Automatic combustion of residual embers
- No separate blower fan required

Cleaning of all heat exchanger pipes

Heat exchanger with automatic cleaning (WOS) of all passes and lower drive

The WOS (Efficiency Optimisation System) consists of special turbulators, which are placed in the heat exchanger pipes **(NEW! Now from first pass)** and allow automatic cleaning of the heating surfaces. Clean heating surfaces ensure greater efficiency and thus fuel savings.

Advantages:
- Greater efficiency
- Fuel economy
- Drive mechanism in cold zone (low thermal load)

Permanently integrated return temperature control

The room temperature control integrated as standard avoids unnecessary radiant heat loss; this special feature guarantees maximum efficiency. An external return temperature control is therefore no longer necessary and saves installation time. The components are intelligently built-in and the main parts (e.g. pump) are visible from the outside and easily accessible.

Advantages:
- Minimum radiant heat loss
- Maximum efficiency
- No external return temperature control required
- Saves space in the boiler room

Balancing valve (optional)

Advantages:
- Can be retrofitted at any time
- Optimal hydraulic balancing of the heating system

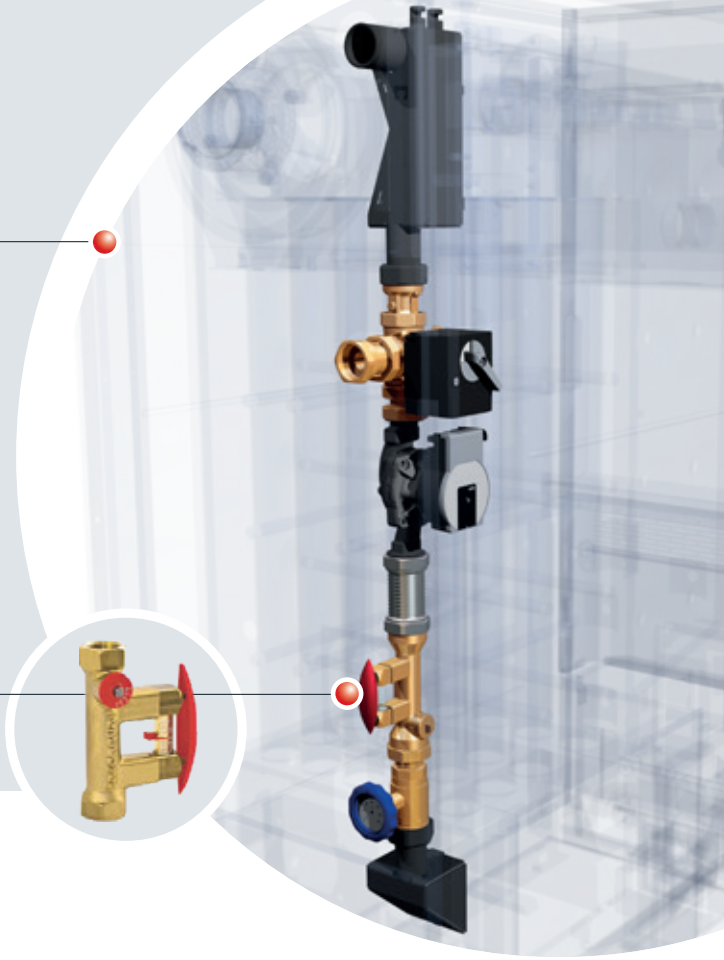

T4e

INTELLIGENT DESIGN DOWN TO THE LAST DETAIL

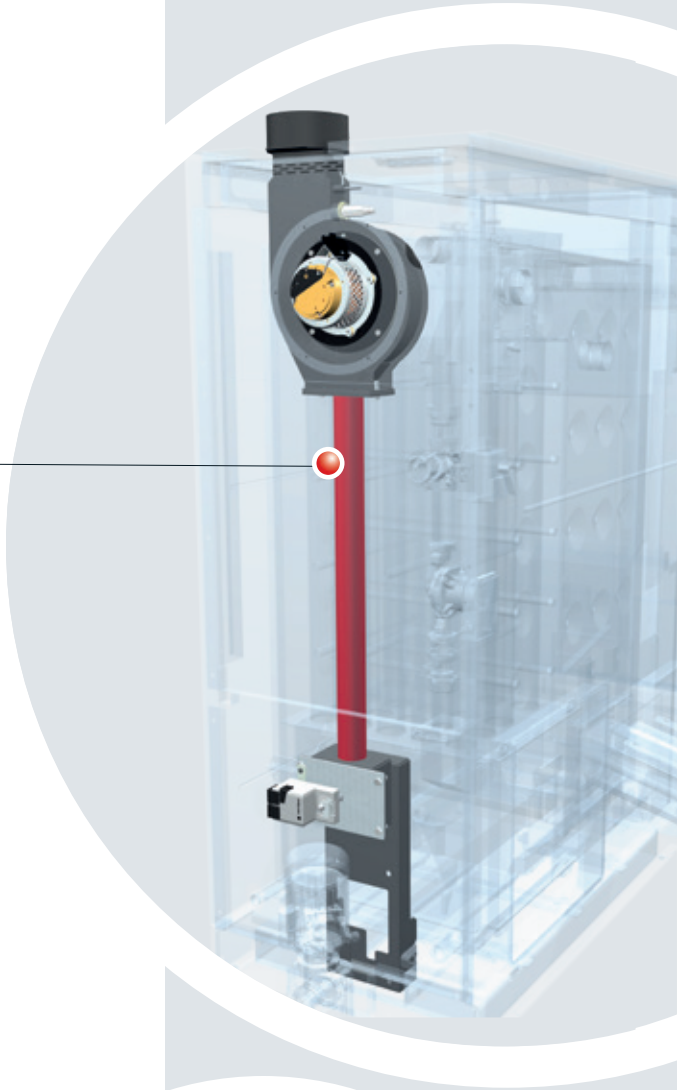

Flue gas recirculation (FGR) (optional)

The flue gas recirculation system (FGR) mixes part of the flue gas with the combustion air and returns it to the combustion zone.
The FGR optimises combustion and performance, and also reduces NOx emissions. The lower combustion temperatures offer added protection for flame-swept parts.

Advantages:
- Precise adjustment via air actuators
- Ideal combustion conditions
- Intelligent control of air quantity

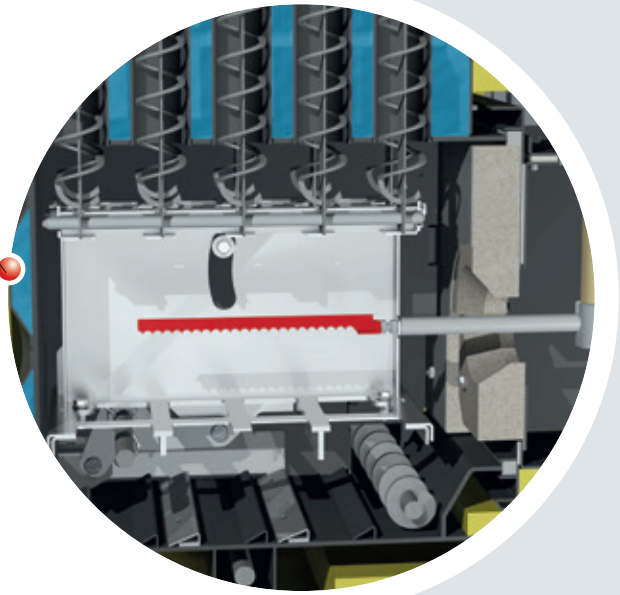

Optional integrated particle separator (electrostatic precipitator)

The optionally available particle separator (electrostatic precipitator) can be added at any time without additional space requirement and thereby considerably reduces the fine dust emissions of the boiler. Cleaning is carried out fully automatically in the joint ash box at the front of the boiler.

Advantages:
- Can be retrofitted on site
- No additional space required
- Combined cleaning with heat exchanger optimisation system (WOS)

NEW! Integrated particle separator (electrostatic precipitator) can be added at any time

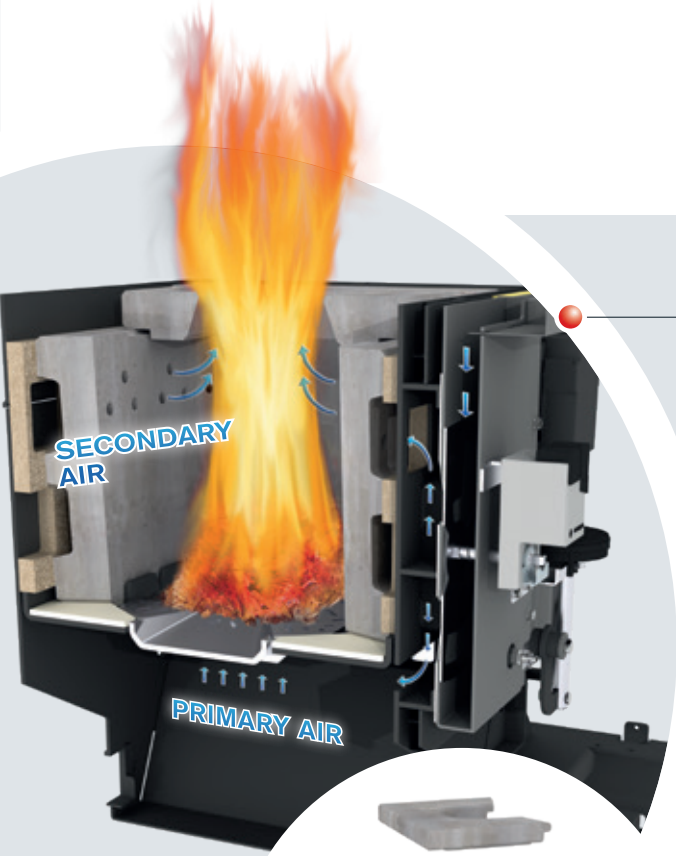

High-temperature silicon carbide combustion chamber and perfect combustion control

The firebricks are made entirely of high-quality fireproof material (silicon carbide). The hot combustion zone ensures optimal combustion and very low emissions.

Patented firebrick!

The patented shaping of the firebrick stones gives the air supply in the combustion chamber particularly good airtightness without the need to use expensive wearing seals. The new shape of the stones also considerably simplifies the maintenance of the combustion chamber as they can be removed easily.

Advantages:
- Highest temperature resistance for a long service life
- Optimum emission values
- Adapts automatically to changing fuel qualities

Ash discharge system with separate ash screws and ash rakes

Ash is automatically emptied from the combustion chamber and the heat exchanger into the ash container using two separate ash screws, which are powered by a communal geared motor. This ensures a clear separation and absolute tightness between the combustion chamber and the heat exchanger and eliminates the risk of air leaks. The ash screws are speed controlled. The boiler automatically generates a warning message when the ash box is too full.

At the same time, the joint geared motor **drives the ash rake** (tested for many years in Froling large-scale boiler systems) in the lower reversing chamber, which transports the heat exchanger ash reliably to the side ash screw.

Advantages:
- Optimal emptying
- No risk of air leakage thanks to twin-chamber ash container
- Just one common drive

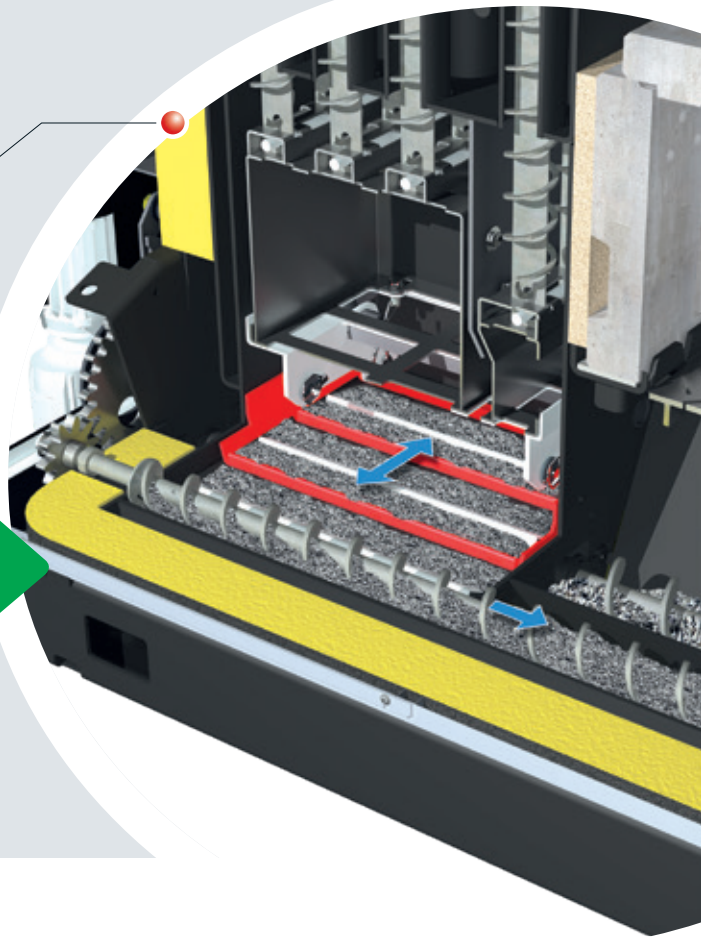

SPECIAL TIPPING GRATE TECHNOLOGY
WITH 110° TIPPING GRATE INCLINATION

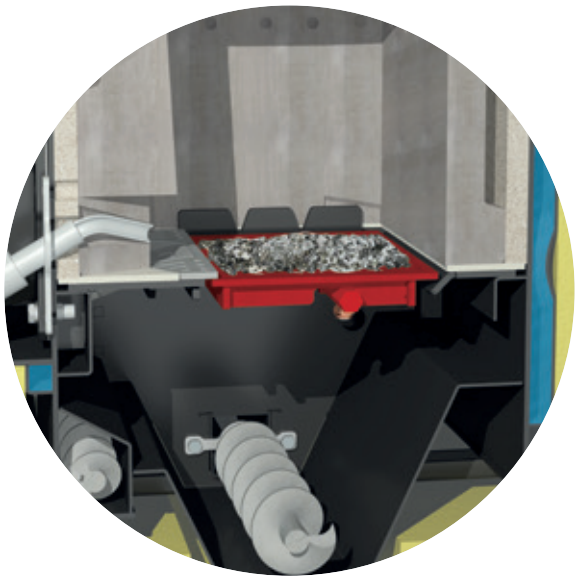

Two-part combustion grate consisting of a fixed insertion zone and automatic tipping grate guarantee energy-saving operation and lowest emissions.

Due to the 110° inclination, the ash is completely emptied from the tipping grate and discharged into the large-volume mobile ash container by means of the ash screw.

1 tipping grate (20 - 60 kW)

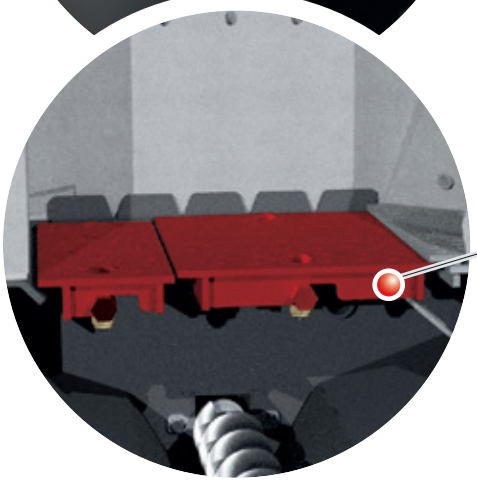

2 tipping grates (80 - 250 kW)

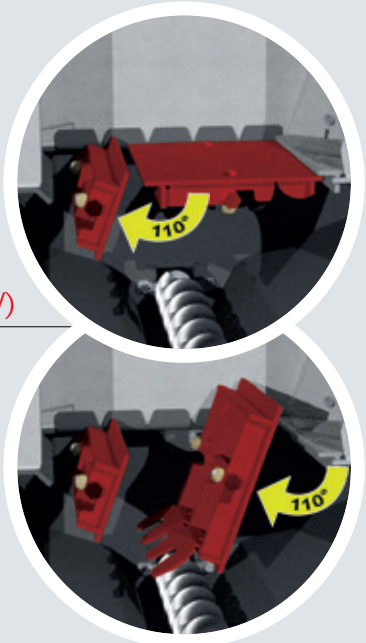

EXTRA CONVENIENCE WITH THE EXTERNAL ASH BOX

With automatic ash removal, the ash is fed into an external ash container. The clever locking mechanism makes it quick and easy to remove the ash container.

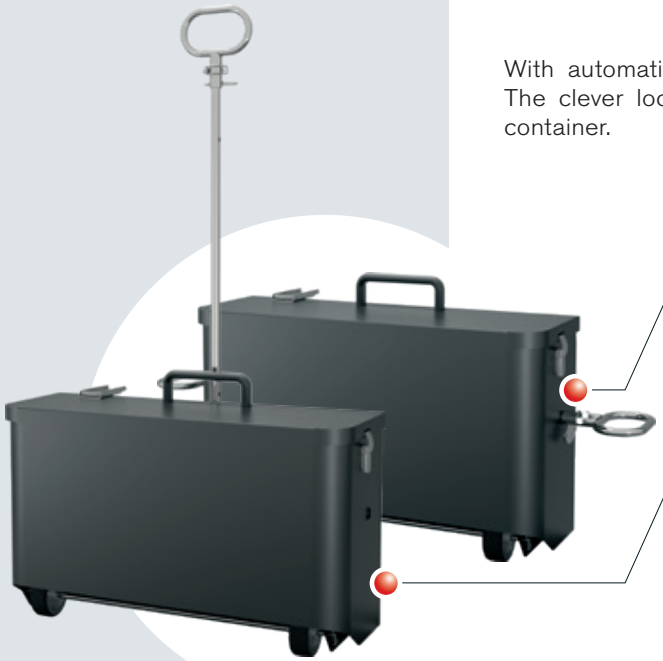

Side carrying handles for quick handling

Easy removal by means of transport rollers

The side carrying handles also allow the ash box to be transported comfortably by pallet forks (e.g. a front loader, forklift truck, etc.).

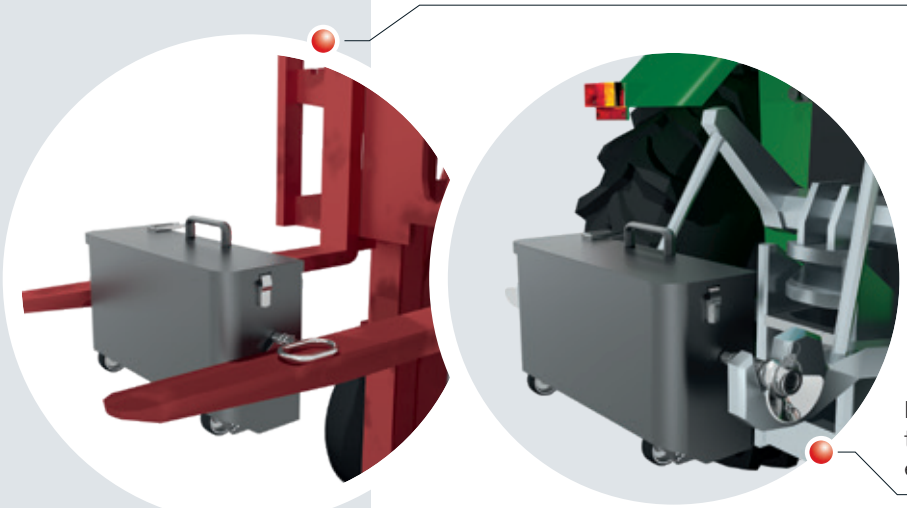

Practical hydraulic device for transporting with the tractor and easy emptying (tipping).

Optional: ash discharge system with bin or ash container with open bottom

For added convenience, ash can optionally be emptied into a standard 240 l dustbin or the 330 l container with open bottom. The ash is automatically conveyed into the dustbin where it can be easily emptied. This ensures long emptying intervals and maximum convenience.

Ash discharge system with bin (240 litres)

Ash container with open bottom (330 litres)

OPTIMISED FUEL TRANSPORT

No sloping sides required!

Temperature monitoring device in the fuel store (only required in Austria).

Monitored gravity shaft cover

Inspection opening
for easy access to the shear edge.

Sturdy stoker screw for reliable fuel feed with automatic turn control.

Robust agitator head

Maintenance-free agitator gearbox

Strong spring blades
for even fuel transport (for wood chips up to P31S / G50).

No sloping sides required

None of Froling's discharge systems requires sloping sides. Without sloping sides, the raising plate fitted to the trough ensures simple operation.

Shear edge

The robust shear plate with cutting edge breaks up larger pieces of fuel guaranteeing continuous fuel feed.

Progressive dosing screw and special trapezoidal duct for minimal force

The plug-in screw system with standard extension pieces between 100 and 2,000 mm (graduations every 100/200 mm) allows easy assembly and flexible positioning of the system in the boiler room.

Special trapezoidal duct

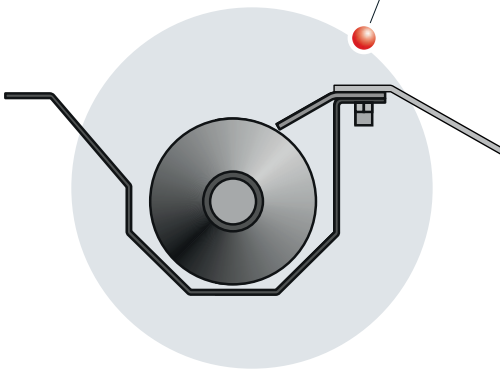

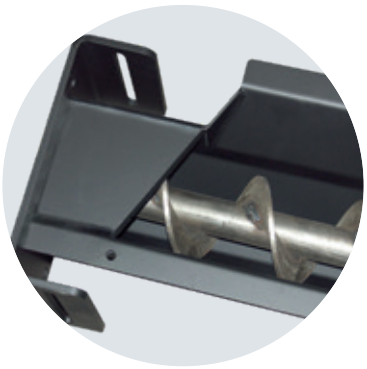

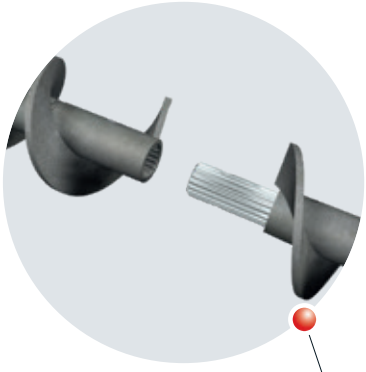

Plug-in screw system

Flexible ball joint

The ball joint is a flexible connecting piece between the discharge screw and the stoker unit. Offering continuous adjustment of the inclinations (up to 15°) and angles, the ball joint allows flexible planning.

High volume rotary valve (Ø 200 mm)

The rotary valve with two large chambers offers maximum burn back protection and continuous material transport.

Highly efficient spur gears

The **powerful, energy-saving spur gears** with a drive power of 0.25 kW ensure that even larger wood chip pieces can be shredded and transported. This design strikes the perfect balance between power and service life.

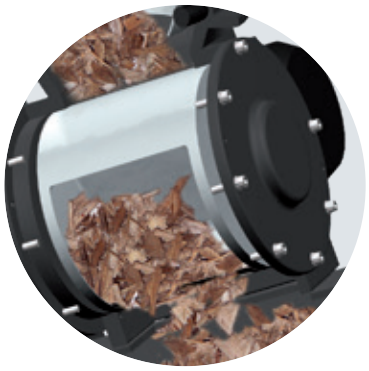

Energy-saving drive motor (only 0.25 kW)

Sturdy stoker unit

The extremely compact stoker unit of the Froling T4e in combination with the rotary valve guarantees maximum burn back protection and reliable fuel feed to the combustion zone. The stoker unit is driven together with the rotary valve by an energy-saving geared motor (highly efficient spur gears with just 0.37 kW power consumption, only 0.55 kW from 80 kW), thus guaranteeing maximum energy efficiency.

The Froling stoker screw with Ø 100 mm or Ø 150 mm (for T4e 200/250) is the optimum solution for safe fuel transport of wood chips up to P31S (previously G50).

Advantages:
- Flexible set-up
- Top burn-back protection
- Low energy consumption
- Great space saving due to the low design height of the stoker unit

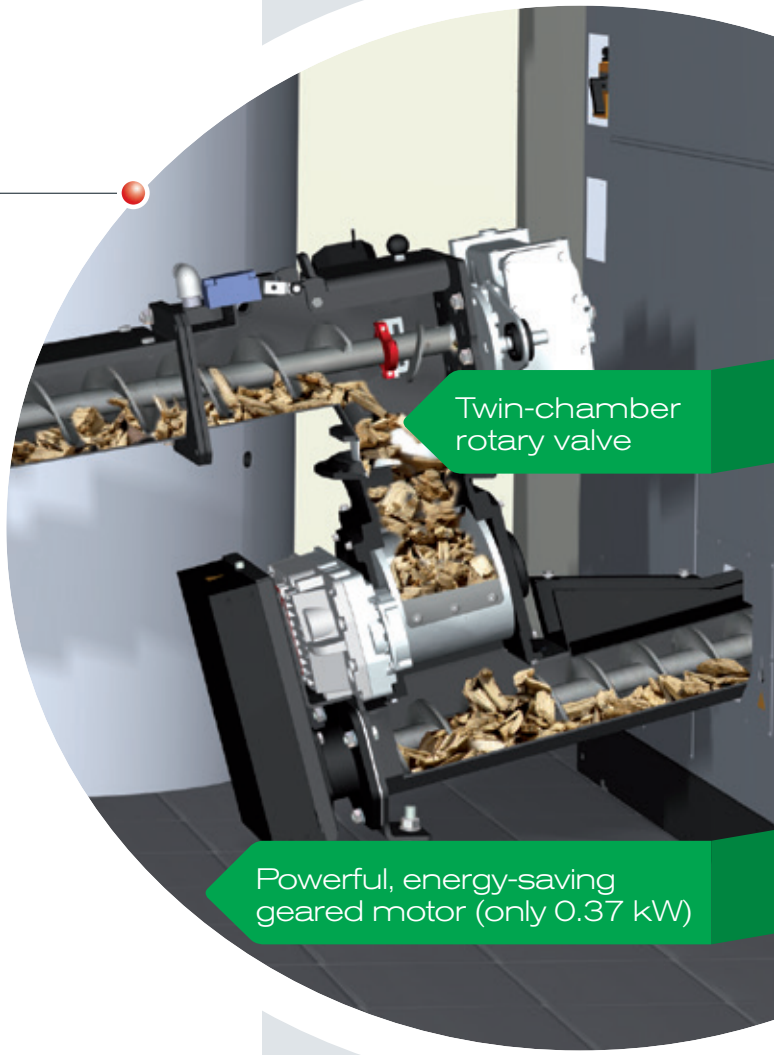

Progressive dosing screw with modular plug-in system

The progressive feed screw guarantees reliable fuel transport. Thanks to the progressive screw raise, the material does not get compacted and can always be moved on easily. This ensures less force and energy consumption.

The modular design of the feed screw with standard extension pieces between 100 and 2,000 mm (graduations every 100/200 mm) allows easy assembly and flexible positioning of the system in the boiler room.

The Froling feed screw does not require sloping sides.

Advantages:
- Flexible set-up
- Reliable material transport
- Low energy

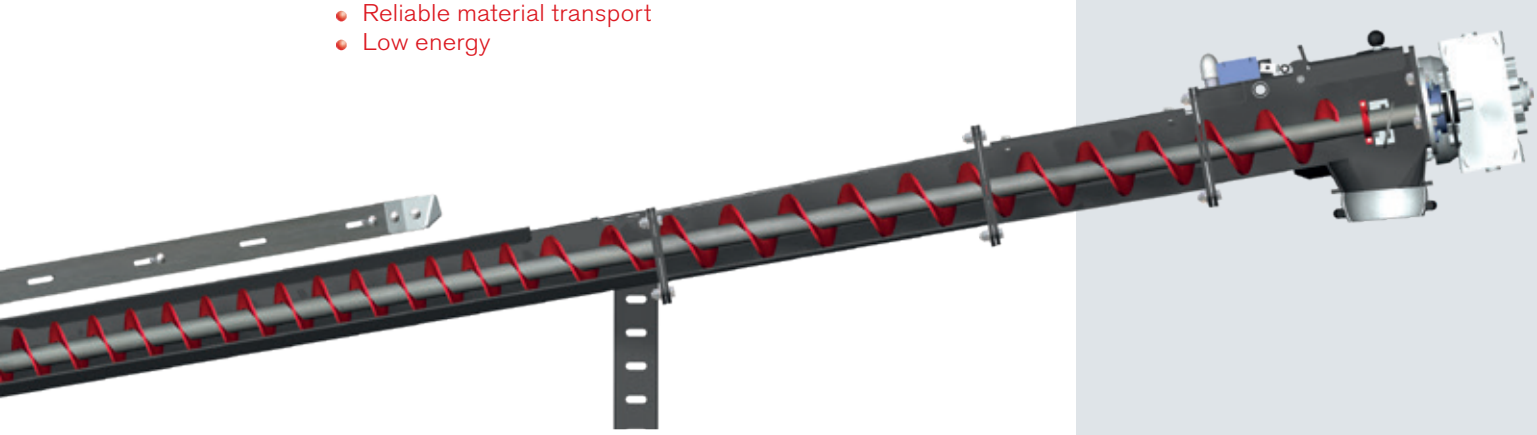

High volume twin-chamber rotary valve

The twin-chamber rotary valve offers maximum operating safety. The rotary valve forms a reliable separation between the discharge system and the feed unit, providing optimal burn back protection. The advanced system design with two spacious chambers ensures that the fuel is transported continuously to the combustion zone. This optimal fuel metering ensures the best possible combustion values.

The rotary valve is extremely quiet and uses only minimal power.

Advantages:

- Continuous flow of material
- Top burn-back protection
- Suitable for P31S (previously G50) wood chips
- 200 mm rotor diameter

The two large chambers (200 mm rotor diameter) are especially suitable for transporting wood chips up to P31S (previously G50). High resistance is recognised automatically. The rotary valve and screw move backwards (several times depending on the parameters set) until transport can be re-started.

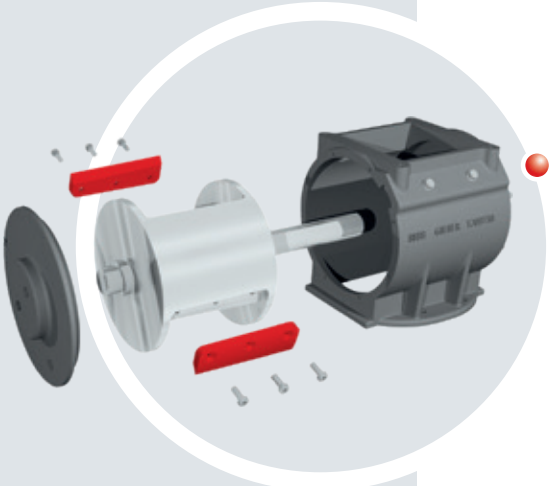

Replaceable blades

The high-quality cutting edges of the blades can also easily cut through coarser pieces of wood chip. The blades both in the rotor and the housing can be simply removed and sharpened if necessary.

ROTARY AGITATOR DISCHARGE SYSTEMS
WITH COMBINED DRIVE

The simple and effective design of Froling's rotary agitator discharge systems ensures smooth operation. Any problematic materials (e.g. foreign bodies) are automatically detected and removed by a reverse turn of the screws (turn control). The feed screw with progressive screw raise ensures low energy consumption.

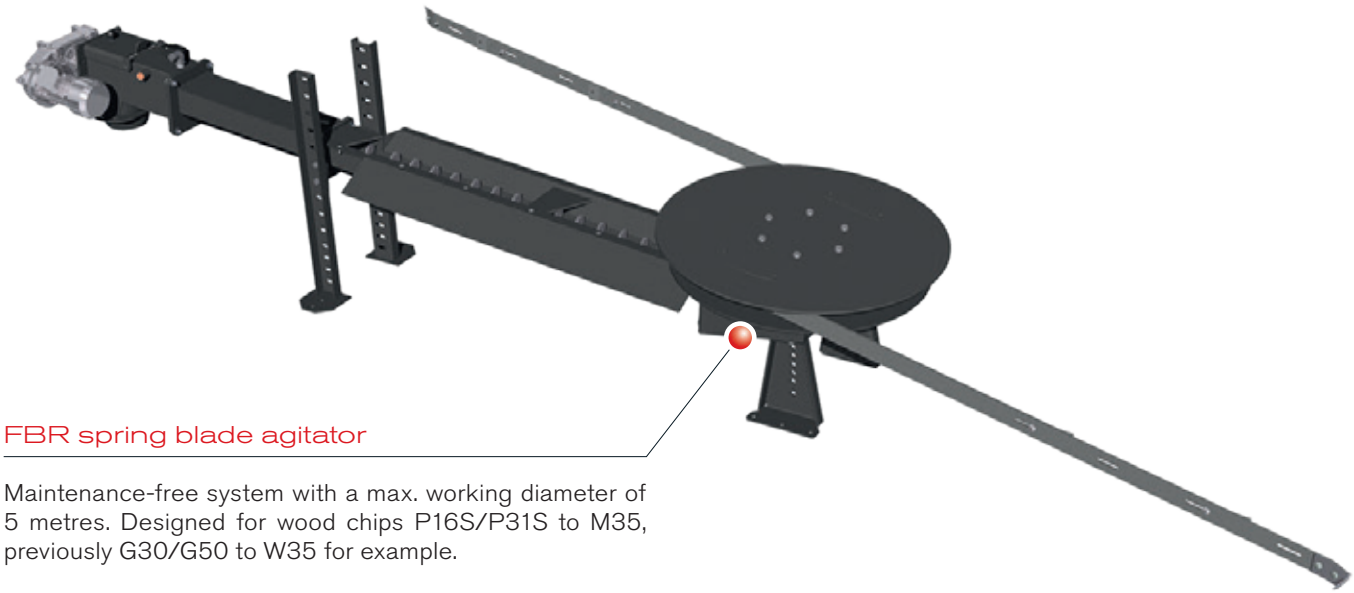

FBR spring blade agitator

Maintenance-free system with a max. working diameter of 5 metres. Designed for wood chips P16S/P31S to M35, previously G30/G50 to W35 for example.

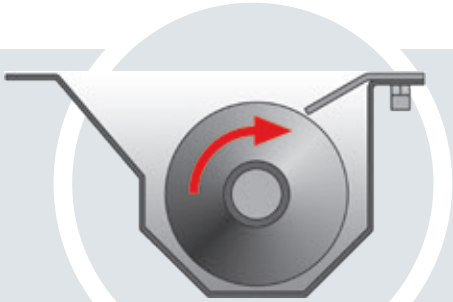

Special trapezoidal duct

The special trapezoidal shape of the trough ensures that fuel is transported smoothly. The system is easy to operate so it saves energy even when feeding in the maximum amount of pellets.

Optional fibre shredder

If the material is particularly fibrous, the optional fibre shredder can shred long parts, thus ensuring reliable transportation of the material.

Rotary agitator arms with tearing hooks

The powerful rotary agitator arms move towards the agitator head during filling and then swing back out when fuel is removed. Together with the sturdy tearing hooks that loosen the fuel, they ensure that the fuel store is emptied.

ROTARY AGITATOR DISCHARGE SYSTEMS
WITH SEPARATE DRIVE

Froling's rotary agitator discharge systems with separate drive offer even greater flexibility. In the FBR-G the rotary agitator is powered independently of the discharge screw. This allows flexible installation and variable adjustment of the feed output. The discharge screws can be positioned on both the left and right of the rotary agitator.

SAMPLE INSTALLATION OPTIONS

One discharge screw on the left

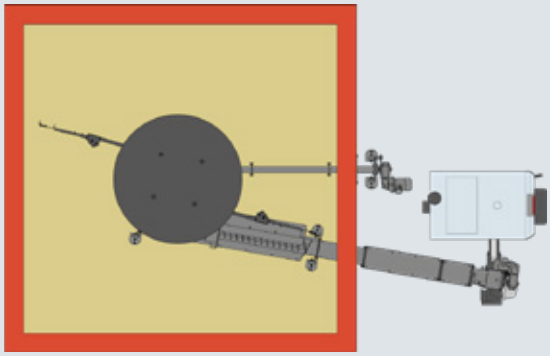

Two discharge screws, one standard, one extra-long

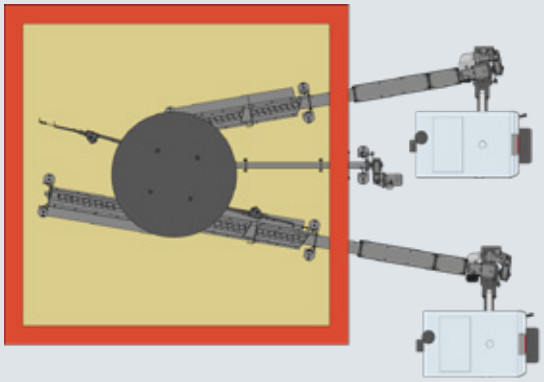

More information in our brochures „Bunker filling systems“!

Vertical feed screw

Froling's vertical feed screw sets new standards for feed output (up to 40m³/h depending on the wood chips used), operating safety and effective distribution. The wood chips are pushed from the tipping gutter into the vertical feed system with a screw, which transports the fuel to the desired height for the distribution device. In this way, the vertical feed screw enables dust-free filling of the store, guaranteeing even distribution of the fuel.

Also available with horizontal distributor screw

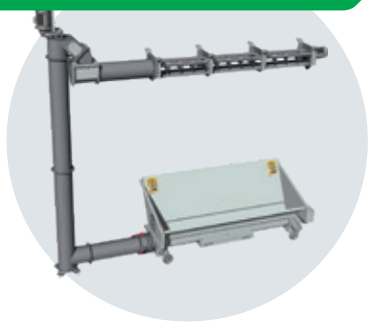

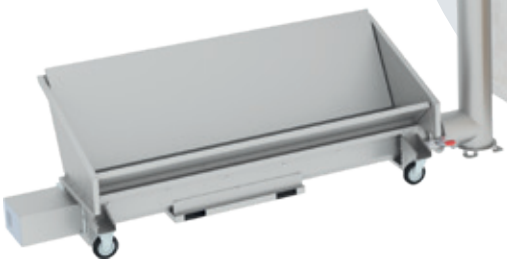

Bunker filling screw

The fuel is transported using the bunker filling screw into the store space via the tipping chute which is located outside the store. The bunker filling screw stops automatically when the bunker is full.

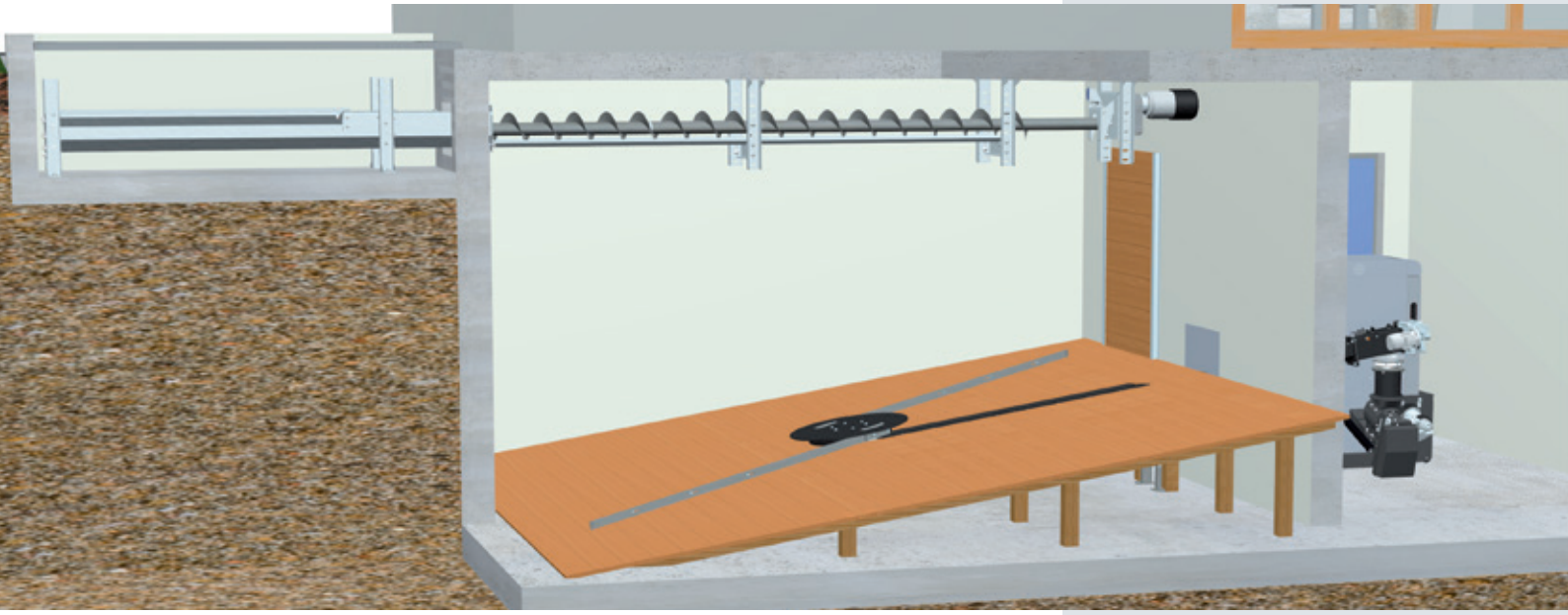

Positioning at ground level

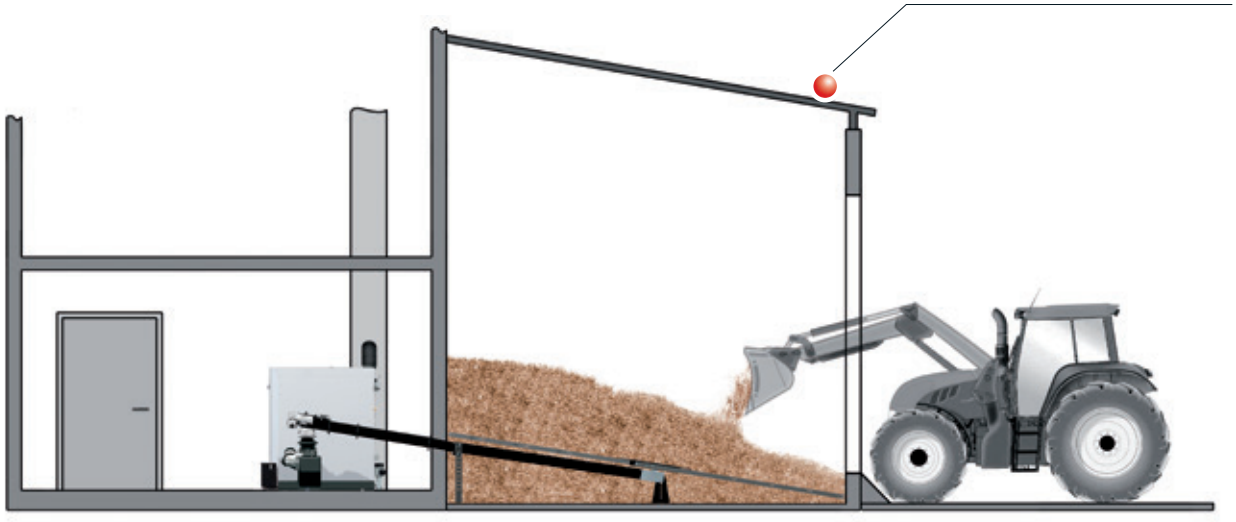

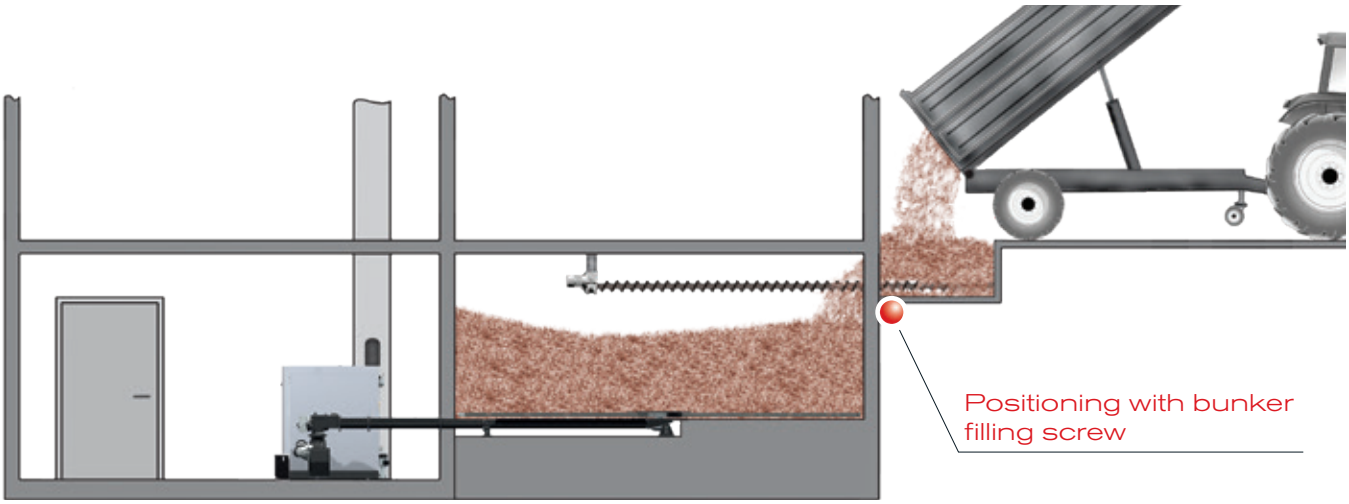

Positioning with bunker filling screw

Positioning with vertical screw

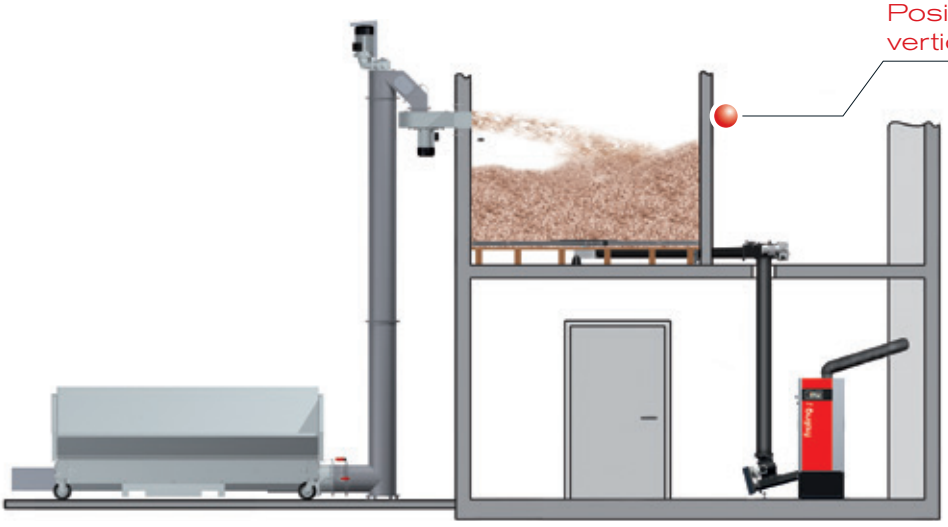

INDIVIDUAL CONTROL UNIT OF THE HEATING SYSTEM

Lambdatronic H 3200 control unit

Fröling provides a future-oriented Lambdatronic H 3200 and a new 7“ touch display. Intelligent control management makes it possible to connect up to 18 heating circuits, up to 4 storage tanks and up to 8 hot water storage tanks. The control unit ensures that the operating statuses are clearly shown. The menu structure is ideally organised to allow easy operation. All essential functions can be selected by simply pressing icons on the large colour display.

Advantages:

- Precise combustion control by a Lambda control using a Lambda probe
- Connection for up to 18 heating circuits, 8 water heaters and up to 4 storage tank
- management systems
- Integration capability for a solar panel system
- LED frame for status display with illuminated presence detection
- Simple and intuitive operation
- Various smart home options (such as Loxone)
- Remote control from the living room (remote control 3200 and RGB 3200 Touch) or via Internet (froeling-connect.com)

SIMPLE & INTUITIVE OPERATION

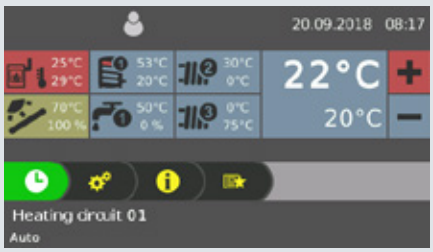

Fig. 1 General overview of the heating circuit (start screen)

Fig. 2 View of the heating times (individually adjustable)

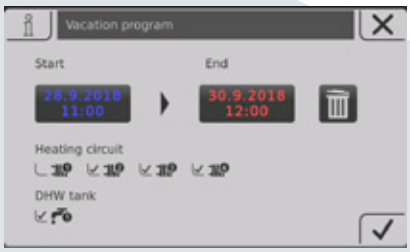

Fig. 3 Overview of the new holiday mode

KEEP TRACK OF EVERYTHING WITH THE FROLING APP

The Froling App allows you to check and control your Froling boiler online from anywhere, at any time. You can read and modify the main status information and settings easily and conveniently online. You can also specify which status messages you want to be informed about via SMS or e-mail (e.g. when the ash box is to be emptied or in the event of a fault message).

Froling boiler (software core module from version V50.04 B05.16) with boiler touch display (from version V60.01 B01.34) a broadband internet connection and a tablet/smartphone with iOS or Android operating system are required. Once the boiler has been connected to the internet and activated, the system can be accessed 24/7 from anywhere using a web-enabled device (mobile, tablet, PC, etc.). The app is available in the Android Play Store and iOS App Store.

- Simple and intuitive operation of the boiler
- Status information can be called up and changed within seconds
- Individual naming of the heating circuits
- Changes of status are notified directly to the user (e.g. via e-mail or push notifications)
- No additional hardware required (such as an Internet gateway)

SMART HOME

Enjoy smart, convenient and piece-of-mind living with the Smart Home connection options from Froling.

Loxone

Combine your Froling heating system with the Loxone Miniserver and the new Froling Extension and implement individual boiler control on the basis of the single room control of the Loxone Smart Home.

Advantages: Easy operation and viewing of the heating circuit via the Loxone Miniserver, immediate notification of status changes and individual operating modes for each situation (presence, holiday, economy mode, etc.)

Modbus

Via the Froling modbus interface, the system can be integrated into a building management system.

ACCESSORIES FOR
EVEN GREATER CONVENIENCE

FRA room temperature sensor

By using the FRA room temperature sensor, sized just 8x8 cm, the main modes of the corresponding heating circuit can be easily selected and adjusted. The FRA can be connected both with and without affecting the store. The adjusting wheel allows you to change the room temperature by up to ± 3°C.

RBG 3200 room console

For even more convenience you can use the RBG 3200 room console and the new RBG 3200 Touch. You can control the heating system easily from your living room. Important system data is clearly displayed and settings can be changed at the push of a button.

RBG 3200 Touch room console

The RBG 3200 Touch has an impressive touchpad interface. The menu structure means it is intuitive and easy to use. The 17x10 cm console with colour screen shows the most important functions at a glance and automatically adjusts the background lighting to the conditions. The room consoles are connected to the boiler controller using a bus cable.

Heating circuit module

With wall casing and one contact sensor as heating circuit control for up to two mixer heating circuits.

Hydraulic module

With wall casing and two immersion sensors to control one or two pumps and one isolating valve with up to six sensors.

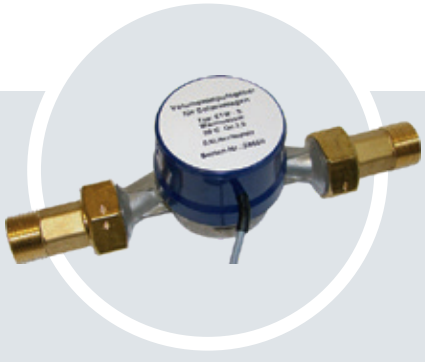

WMZ solar package kit

Set for measuring heat quantity, consisting of a volume pulse transmitter ETW-S 2.5, a collector sensor and two contact sensors for recording flow and return temperatures.

NEW!

FROLING
CASCADE CONTROLLER

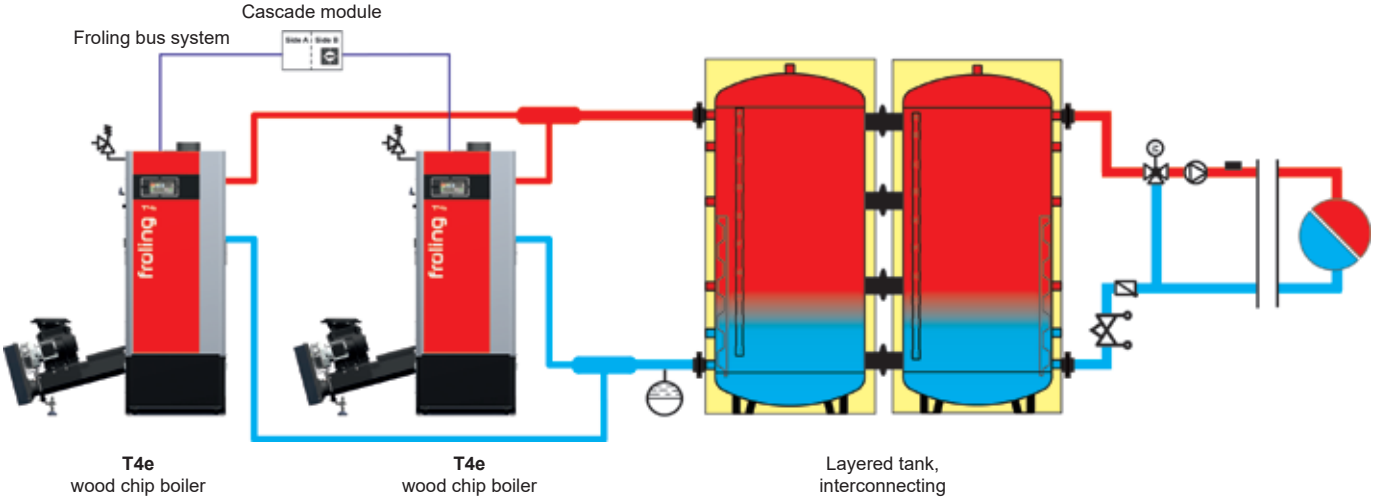

T4e with layered tank, interconnecting

Heating requirements vary considerably, especially in large buildings such as hotels or public buildings. Froling offers the necessary flexibility with a cascade. This smart solution allows you to combine up to four T4e wood chip boilers. You can also see the benefits of a cascade during summer months. If the heat requirement is low, one boiler is often sufficient for hot water preparation. This provides a particularly efficient and economical heating solution. A further advantage is the increased reliability of operation, as the heat is provided by several boilers.

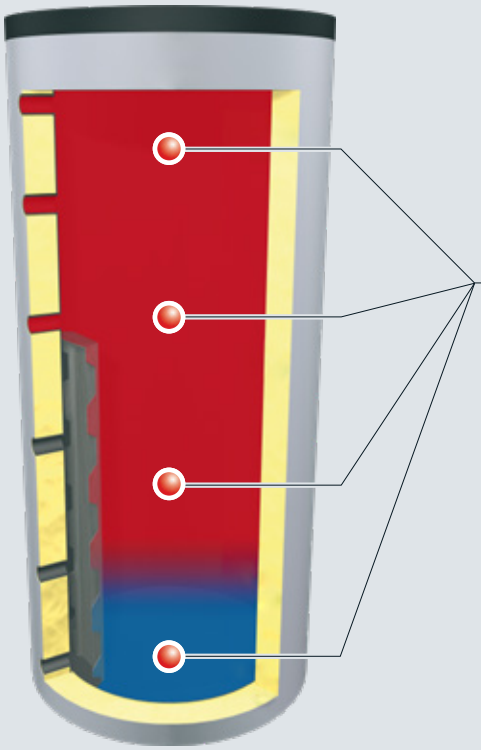

MULTI-SENSOR
STORAGE TANK MANAGEMENT

Precise storage tank level with four sensors

In addition to conventional storage tank management with two sensors, Froling also offers the option of multi-sensor storage tank management. For this function four sensors are distributed along the entire height of the storage tank. The controller then uses these to determine the storage tank fill level. The controller can thus quickly identify load changes and adjust the boiler output early on. Fewer start-stop cycles result in a long boiler life and maximise the system efficiency.

- Minimal start-stop cycles
- High system efficiency
- Optimised for cascade systems

TECHNICAL INFORMATION
SAVES MORE ENERGY

The Froling bus system makes it possible to install extension modules at any location. The local controls can be installed wherever they are needed: at the boiler, at the heat distributor, at the tank, in the living room or in the house next door. Additionally, electric cables are kept to a minimum.

T4e with multiple house system

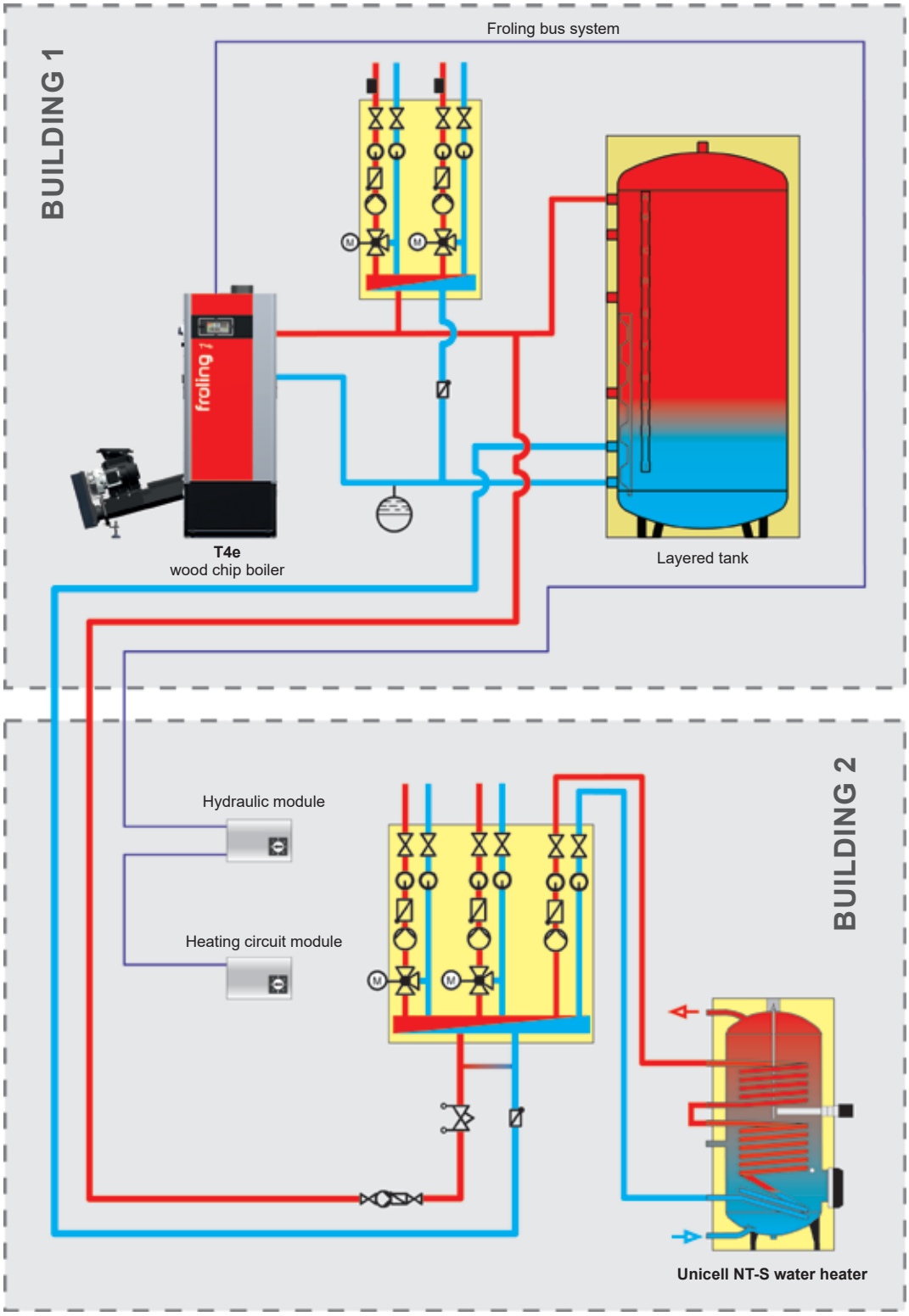

CALCULATING THE FUEL REQUIREMENT

Wood chip fuel specification

P16S woodchips (previously G30)	
Size	3.15 – 16 mm (min. 60%)
Max. length	45 mm
Max. cross-section	2 cm²

P31S woodchips (previously G50)	
Size	3.15 – 31.5 mm (min. 60%)
Max. length	150 mm
Max. cross-section	4 cm²
water content	max. 35%
Bulk weight	approx. 210 - 250 kg/bcm
Energy content	3.5 kWh/kg

Pellets fuel data

Length	3.15 - 40 mm
Diameter	6 mm
Water content	max. 10%
Bulk weight	approx. 650 kg/m³
Ash content	max. 0.5%
Energy content	4.9 kWh/kg

The fuel requirement depends on the fuel quality. The following rule of thumb can be used to make a rough estimate:

Wood chips:

Hardwood P16S/M30 (previously G30/W30):
2.0 bcm per kW heating load
Softwood P16S/M30 (previously G30/W30):
2.5 bcm per kW heating load

Pellets:

1 m³ per kW heating load

Annual wood chip requirement in bulk cubic metres

Source: Bayerische Forstverwaltung

E.g. annual consumption approx. 57,500 kWh (T4e 30 kW, 1,600 full load hours, 93.5% efficiency, wood chips M30 previously W30)

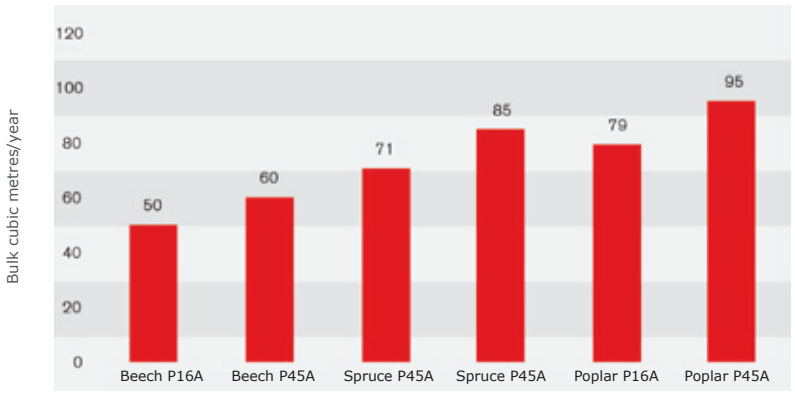

Heating values depending on water content and moisture

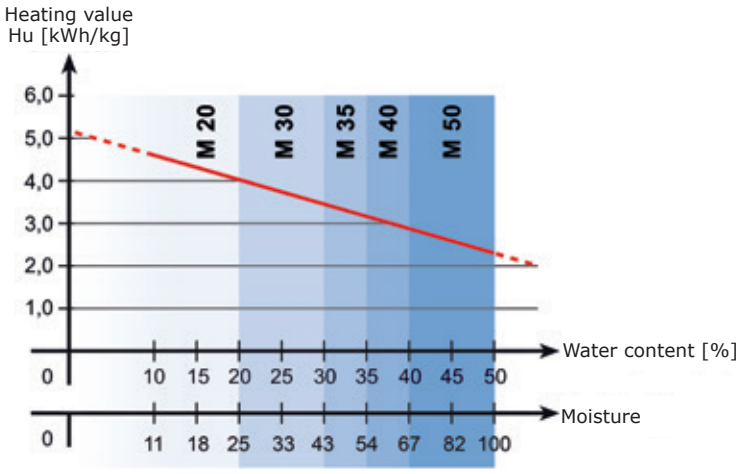

DIMENSIONS T4e
20 - 180 kW

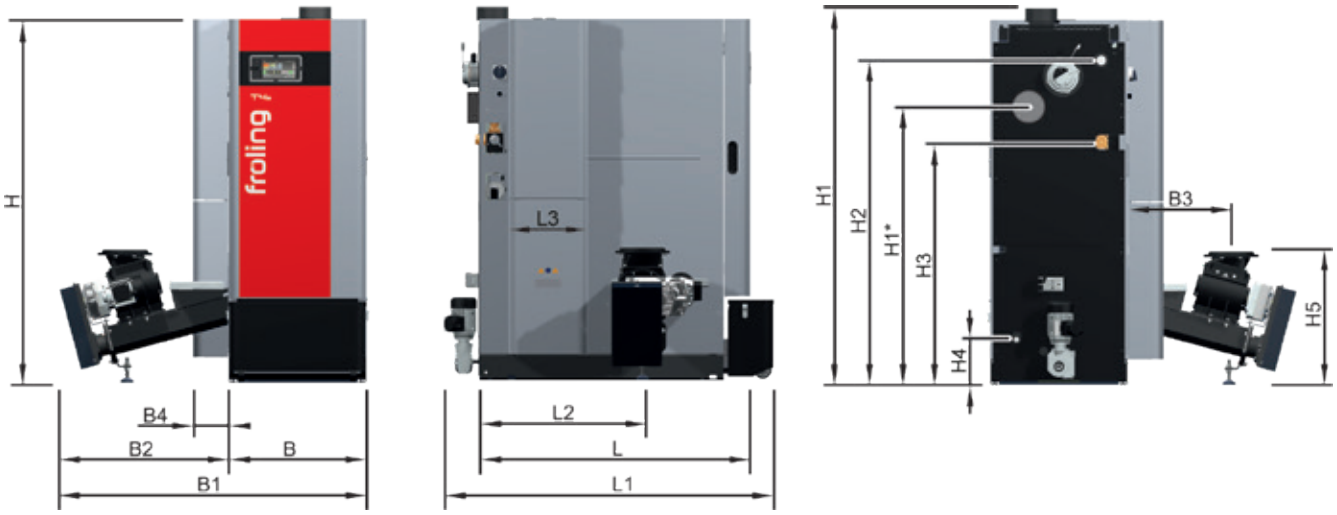

Dimensions [mm]		20 - 35	45 - 60	80 - 110	130 - 180
H	Boiler height	1490	1690	1740	1840
H1	Total height including flue gas pipe connection	1545	1745	1790	1895
H1*	Optional flue gas pipe connection	960	1160	1210	1290
H2	Height of flow connection	1305	1505	1545	1660
H3	Height of return connection with integrated return feed boost	955	1155	1135	1210
H4	Height of the drainage connection	210	210	200	200
H5	Height of rotary valve connection	615	615	615	615
B	Boiler width Width without insulation (width required)	640 -	640 -	790 -	790 -
B1	Total width with stoker unit	1410	1410	1570	1570
B2	Width of stoker unit	770	770	780	780
B3	Distance from boiler side to stoker connection	470	470	480	480
B4	Width of particle separator/electrostatic precipitator (optional)	165	165	165	165
L	Length of boiler	1170	1270	1420	1770
L1	Overall length	1475	1550	1795	2105
L2	Length, back of boiler to stoker connection	690	770	890	1160
L3	Length of particle separator/electrostatic precipitator (optional)	370	370	550	715
	Flue pipe diameter	149	149	179	199
	Diameter boiler flow / boiler return	1 1/4“	1 1/4	2“	2“
	Drainage	1/2“	1/2“	1“	1“

CAUTION: The flow and return connections are located on the stoker side (T4e 20-180). The rear flue pipe connection (optional) is installed on the averted side of the stoker (T4e 20-110). In the case of the T4e 130-180, the rear flue pipe connection (optional) is always on the left side of the boiler.

DIMENSIONS T4e
200 - 250 kW

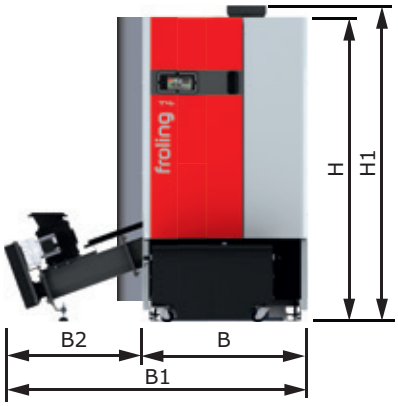

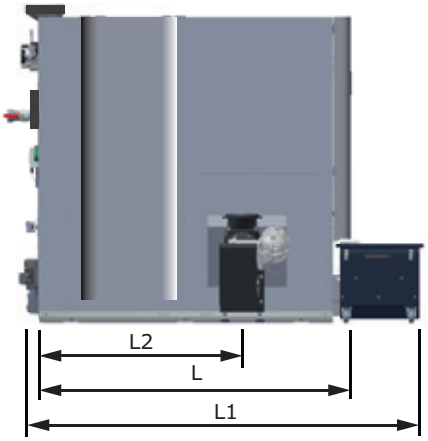

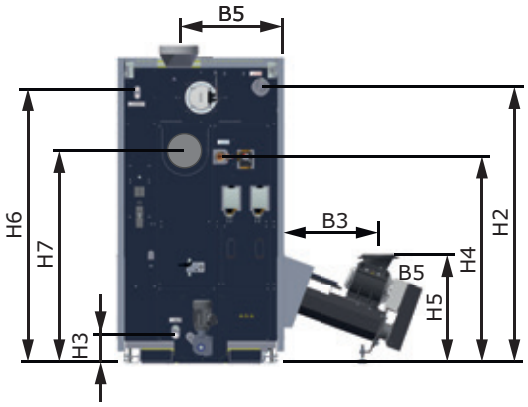

Dimensions [mm]		200	250
H	Boiler height	1950	1950
H1	Total height including flue gas pipe connection	2025	2025
H2	Height of flow connection	1770	1770
H3	Height of the drainage connection	180	180
H4	Height of return connection with integrated return feed boost	1240	1240
H5	Height of rotary valve connection	690	690
H6	Height, safety heat exchanger	1720	1720
H7	Rear flue gas pipe connection (optional for T4e 200 - 250)	1350	1350
B	Boiler width Width without insulation (width required)	1060 980	1060 980
B1	Total width with stoker unit	1955	1955
B2	Width of stoker unit	890	890
L	Length of boiler	2005	2005
L1	Overall length	2550	2550
L2	Length, back of boiler to stoker connection	1310	1310
	Flue pipe diameter	249	249
	Diameter boiler flow / boiler return	2 1/2“	2 1/2“
	Drainage	1“	1“

TECHNICAL SPECIFICATIONS

Technical specifications - T4e		20	25	30
Nominal output	[kW]	19,9	25,1	30
Thermal output range	[kW]	5,95 - 19,9	7,51 - 25,1	9 - 30
Electrical connection	[V/Hz/A]	400V / 50Hz / fused C16A		
Power consumption wood chip mode NL/PL	[W]	48 / 39	55 / 39	59 / 39
Power consumption pellet mode NL/PL	[W]	55 / 42	60 / 40	73 / 43
Weight of boiler (including stoker, without water)	[kg]	740	740	740
Boiler capacity (water)	[l]	117	117	117
Maximum boiler temperature setting	[°C]	90	90	90
Permitted operating pressure	[bar]	4	4	4
Permitted fuel as per EN ISO 17225[1)]		Part 2: Wood pellets class A1 / D06 Part 4: Wood chips class A2 / P16S-P31S		

		35	45	50
Nominal output	[kW]	35	45	49,9
Thermal output range	[kW]	10,5 - 35	13,5 - 45	14,9 - 49,9
Electrical connection	[V/Hz/A]	400V / 50Hz / fused C16A		
Power consumption wood chip mode NL/PL	[W]	63 / 38	85 / 61	94 / 61
Power consumption pellet mode NL/PL	[W]	84 / 46	96 / 49	97 / 49
Weight of boiler (including stoker, without water)	[kg]	740	850	850
Boiler capacity (water)	[l]	117	155	155
Maximum boiler temperature setting	[°C]	90	90	90
Permitted operating pressure	[bar]	4	4	4
Permitted fuel as per EN ISO 17225[1)]		Part 2: Wood pellets class A1 / D06 Part 4: Wood chips class A2 / P16S-P31S		

		60	80	90
Nominal output	[kW]	60	80	90
Thermal output range	[kW]	18 - 60	24 - 80	27 - 90
Electrical connection	[V/Hz/A]	400V / 50Hz / fused C16A		
Power consumption wood chip mode NL/PL	[W]	113 / 61	114 / 47	126 / 51
Power consumption pellet mode NL/PL	[W]	99 / 49	102 / 48	116 / 49
Weight of boiler (including stoker, without water)	[kg]	850	1160	1160
Boiler capacity (water)	[l]	155	228	228
Maximum boiler temperature setting	[°C]	90	90	90
Permitted operating pressure	[bar]	4	4	4
Permitted fuel as per EN ISO 17225[1)]		Part 2: Wood pellets class A1 / D06 Part 4: Wood chips class A2 / P16S-P31S		

		100	110	130
Nominal output	[kW]	100	110	130
Thermal output range	[kW]	30 - 100	33 - 110	39 - 130
Electrical connection	[V/Hz/A]	400V / 50Hz / fused C16A		
Power consumption wood chip mode NL/PL	[W]	138 / 56	138 /57	136 / 59
Power consumption pellet mode NL/PL	[W]	129 / 48	128 / 49	124 / 52
Weight of boiler (including stoker, without water)	[kg]	1160	1160	1500
Boiler capacity (water)	[l]	228	228	320
Maximum boiler temperature setting	[°C]	90	90	90
Permitted operating pressure	[bar]	4	4	4
Permitted fuel as per EN ISO 17225[1)]		Part 2: Wood pellets class A1 / D06 Part 4: Wood chips class A2 / P16S-P31S		

T4e WOOD CHIP BOILER

		140	150	160
Nominal output	[kW]	140	150	160
Thermal output range	[kW]	47 - 140	45 - 150	48 - 160
Electrical connection	[V/Hz/A]	400V / 50Hz / fused C16A		
Power consumption wood chip mode NL/PL	[W]	137 / 58	136 / 59	136 / 60
Power consumption pellet mode NL/PL	[W]	125 / 51	124 / 52	124 / 52
Weight of boiler (including stoker, without water)	[kg]	1500	1500	1500
Boiler capacity (water)	[l]	320	320	320
Maximum boiler temperature setting	[°C]	90	90	90
Permitted operating pressure	[bar]	4	4	4
Permitted fuel as per EN ISO 17225[1)]		Part 2: Wood pellets class A1 / D06 Part 4: Wood chips class A2 / P16S-P31S		

		170	180
Nominal output	[kW]	170	180
Thermal output range	[kW]	51 - 170	59 - 180
Electrical connection	[V/Hz/A]	400V / 50Hz / fused C16A	
Power consumption wood chip mode NL/PL	[W]	136 / 60	136 / 61
Power consumption pellet mode NL/PL	[W]	123 / 53	122 / 54
Weight of boiler (including stoker, without water)	[kg]	1500	1500
Boiler capacity (water)	[l]	320	320
Maximum boiler temperature setting	[°C]	90	90
Permitted operating pressure	[bar]	4	4
Permitted fuel as per EN ISO 17225[1)]		Part 2: Wood pellets class A1 / D06 Part 4: Wood chips class A2 / P16S-P31S	

		200	250
Nominal output	[kW]	199	250
Thermal output range	[kW]	59 - 199	75 - 250
Electrical connection	[V/Hz/A]	400V / 50Hz / fused C16A	
Power consumption wood chip mode NL/PL	[W]	135 / 62	214 / 62
Power consumption pellet mode NL/PL	[W]	120 / 55	162 / 55
Weight of boiler (including stoker, without water)	[kg]	2500	
Boiler capacity (water)	[l]	438	
Maximum boiler temperature setting	[°C]	90	
Permitted operating pressure	[bar]	4	
Permitted fuel as per EN ISO 17225[1)]		Part 2: Wood pellets class A1 / D06 Part 4: Wood chips class A2 / P16S-P31S	

[1)] Detailed information on the fuel is included in the operating instructions, in the section on “Permitted fuels”

The ecodesign requirements according to VO (EU) 2015/1189, Annex II, point 1. are met.

OPERATING AND

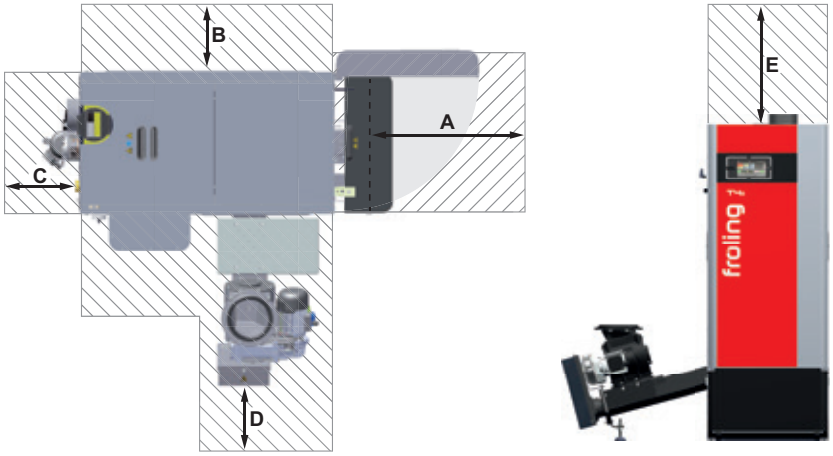

Minimum clearances [mm]	20	25	30	35	45
A Insulated door to wall	700	700	700	700	700
B Side of boiler to wall	150	150	150	150	150
C Back of boiler to wall	500	500	500	500	500
D Stoker to wall	300	300	300	300	300
E Maintenance area above the boiler	500	500	500	500	500
Minimum room height	1800	1800	1800	1800	2000

	50	60	80	90	100
A Insulated door to wall	700	700	800	800	700
B Side of boiler to wall	150	150	150	150	150
C Back of boiler to wall	500	500	500	500	500
D Stoker to wall	300	300	300	300	300
E Maintenance area above the boiler	500	500	500	500	500
Minimum room height	2000	2000	2100	2100	2100

	110	130	140	150	160
A Insulated door to wall	800	800	800	800	800
B Side of boiler to wall	150	150	150	150	150
C Back of boiler to wall	500	500	500	500	500
D Stoker to wall	300	300	300	300	300
E Maintenance area above the boiler	500	500	500	500	500
Minimum room height	2100	2350	2350	2350	2350

	170	180
A Insulated door to wall	800	800
B Side of boiler to wall	150	150
C Back of boiler to wall	500	500
D Stoker to wall	300	300
E Maintenance area above the boiler	500	500
Minimum room height	2350	2350

MAINTENANCE AREAS

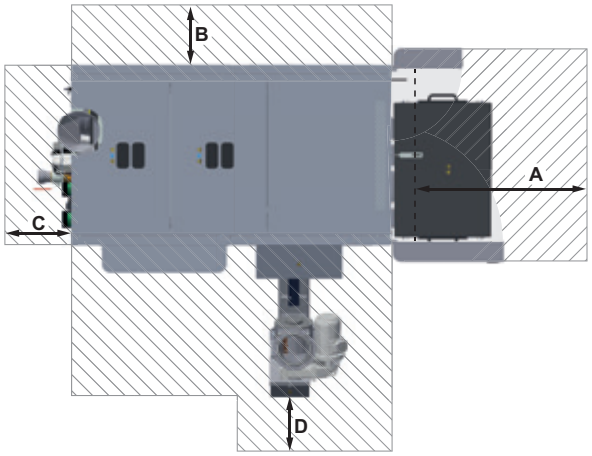

		200	250
A	Insulated door to wall	900	900
B	Side of boiler to wall	150	150
C	Back of boiler to wall	500	500
D	Stoker to wall	300	300
E	Maintenance area above the boiler	500	500
Minimum room height		2500	2500

NOTES

Pellet boiler

PE1 Pellet	7 - 35 kW	P4 Pellet	48 - 105 kW
PE1c Pellet	16 - 22 kW	PT4e	120 - 250 kW

Firewood boiler

S1 Turbo	15 - 20 kW
S3 Turbo	20 - 45 kW
S4 Turbo	22 - 60 kW

Dual fuel boiler

SP Dual compact	15 - 20 kW
SP Dual	22 - 40 kW

Wood chip / Large boilers

T4e	20 - 350 kW	TI	350 kW
Turbomat	150 - 550 kW	Lambdamat	750 - 1500 kW

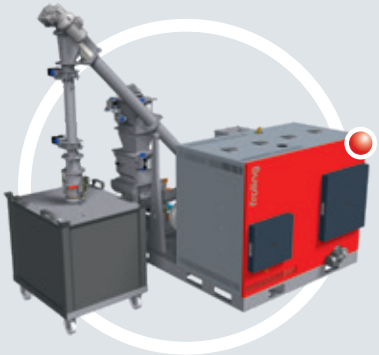

Wood combined heat and power

Fixed-bed gasifier CHP	45 - 500 kWel

Your Froling partner

Fröling Heizkessel- und Behälterbau Ges.m.b.H.
A-4710 Grieskirchen, Industriestr. 12

AT: Tel +43 (0) 7248 606-0
Fax +43 (0) 7248 606-600

DE: Tel +49 (0) 89 927 926-0
Fax +49 (0) 89 927 926-219

E-mail: info@froeling.com
Web: www.froeling.com

P1040321 - All illustrations intended as a guide only! We reserve the right to make technical changes without prior notice. Errors and omissions excepted.

Appendix C Hazardous Chemical Technical & Safety Data Sheets

Safety Data Sheet
according to WHS Regulations

Printing date 30.09.2022 Version number 1 Revision: 30.09.2022

Hazardous according to criteria of Australian Safety and Compensation Council.

1 Identification

· **Product identifier**
· **Trade name Jowat 950.82**
· **Relevant identified uses of the substance or mixture and uses advised against**
No further relevant information available.
· **Application of the substance / the mixture** Glue
· **Uses advised against** Restricted to professional users.

· **Details of the supplier of the safety data sheet**
· **Manufacturer/Supplier:**
Jowat Universal Adhesives Australia Pty. Ltd
2/12 Kerr Road
Ingleburn, NSW 2565
Tel.: +612 9605 3477
Fax: +612 9605 8477
Mobil: +61 435 093524
E-Mail: shane.devereaux@jowatpacific.com
· **Department issuing data specification sheet:**
Environmental management
Tel. +49 5231 749 -218 / -211 / -5460 / -5374
e-mail: umweltmanagement@jowat.de
· **Department providing the information:**
Jowat Universal Adhesives Australia Pty., Ltd
2/12 Kerr Road, Ingleburn, NSW Australia 2565
PO Box 687 Ingleburn NSW Australia 1890
Phone: +61 2 9605 3477
info@jowatpacific.com
· **Emergency telephone number:**
InfraServ Hoechst - Gefahrenabwehrmeldezentrale
D - 65926 Frankfurt
Fon: +49 (0)69-305-6418
131 126 (Poisons Information Centre)

* 2 Hazard(s) Identification

· **Classification of the substance or mixture**

flame

Flam. Liq. 3 H226 Flammable liquid and vapour.

Eye Irritation 2A H319 Causes serious eye irritation.

· **Label elements**
· **GHS label elements**
The product is classified and labelled according to the Globally Harmonised System (GHS).
· **Hazard pictograms**

GHS02 GHS07

· **Signal word** Warning

(Contd. on page 2)

Safety Data Sheet
according to WHS Regulations

Printing date 30.09.2022 Version number 1 Revision: 30.09.2022

Trade name Jowat 950.82

(Contd. from page 1)

· **Hazard statements**
H226 Flammable liquid and vapour.
H319 Causes serious eye irritation.
· **Precautionary statements**

P210	Keep away from heat/sparks/open flames/hot surfaces. No smoking.
P241	Use explosion-proof electrical/ventilating/lighting equipment.
P303+P361+P353	IF ON SKIN (or hair): Remove/Take off immediately all contaminated clothing. Rinse skin with water/shower.
P305+P351+P338	IF IN EYES: Rinse cautiously with water for several minutes. Remove contact lenses, if present and easy to do. Continue rinsing.
P370+P378	In case of fire: Use CO2, powder or water spray to extinguish.
P501	Dispose of contents/container in accordance with local/regional/national/ international regulations.

· **Other hazards**
· **Results of PBT and vPvB assessment**
· **PBT:** Not applicable.
· **vPvB:** Not applicable.

* 3 Composition and Information on Ingredients

· **Chemical characterisation: Mixtures**
· **Description:** Adhesive.

· **Dangerous components:**			
64-17-5	ethanol	Flam. Liq. 2, H225	25-<35%

· **SVHC** Not applicable.
· **Additional information**
If any R-phrases (risk-phrases) are listed, please refer for the exact wording to section 16.

* 4 First Aid Measures

· **Description of first aid measures**
· **After skin contact** Instantly wash with water and soap and rinse thoroughly.
· **After eye contact**
Rinse opened eye for several minutes under running water. If symptoms persist, consult physician.
· **After swallowing** In case of persistent symptoms consult physician.
· **Information for physician**
· **Most important symptoms and effects, both acute and delayed**
No further relevant information available.
· **Indication of any immediate medical attention and special treatment needed**
No further relevant information available.

5 Fire Fighting Measures

· **Extinguishing media**
· **Suitable extinguishing agents**
Foam extinguishing agent
CO2, extinguishing powder or water jet. Fight larger fire with alcohol-resistant foam.
· **Special hazards arising from the substance or mixture**
Formation of toxic gases is possible during heating or in case of fire.
Can be released in case of fire
Nitrogen oxides (NOx)
Carbon monoxide (CO)
· **Advice for firefighters**
· **Protective equipment:**
Wear self-contained breathing apparatus.
Do not inhale explosion gases or combustion gases.

6 Accidental Release Measures

· **Personal precautions, protective equipment and emergency procedures** Wear protective clothing.

(Contd. on page 3)

Safety Data Sheet
according to WHS Regulations

Printing date 30.09.2022 Version number 1 Revision: 30.09.2022

Trade name Jowat 950.82

(Contd. from page 2)

· **Environmental precautions:**
Do not allow product to reach sewage system or water bodies.
Prevent material from reaching sewage system, holes and cellars.
Prevent from spreading (e.g. by damming-in or oil barriers).
· **Methods and material for containment and cleaning up:**
Absorb with liquid-binding material (sand, diatomite, acid binders, universal binders, sawdust).
Dispose of contaminated material as waste according to item 13.
Ensure adequate ventilation.
· **Reference to other sections**
See Section 7 for information on safe handling
See Section 8 for information on personal protection equipment.
See Section 13 for information on disposal.

7 Handling and Storage

· **Handling**
· **Precautions for safe handling**
Store in cool, dry place in tightly closed containers.
Ensure that suitable extractors are available on processing machines. In the context of the risk assessment, it is necessary to evaluate whether and to what extent protective measures are required. If necessary, a workplace measurement has to be carried out.
· **Information about protection against explosions and fires:** Protect against electrostatic charges.

· **Conditions for safe storage, including any incompatibilities**
· **Storage**
· **Requirements to be met by storerooms and containers:** No special requirements.
· **Information about storage in one common storage facility:** Not required.
· **Further information about storage conditions:** None.
· **Storage class** 3
· **Specific end use(s)** No further relevant information available.

* 8 Exposure controls and personal protection

· **Control parameters**

· **Components with critical values that require monitoring in the workplace:**	
64-17-5 ethanol	
WES	Long-term value: 1880 mg/m³, 1000 ppm

· **Additional information:** The lists that were valid during the compilation were used as basis.

· **Exposure controls**
· **Additional information about design of technical systems:** No further data; see item 7.
· **Personal protective equipment**
· **General protective and hygienic measures**
To ensure proper protection for any given situation, seek guidance from the following sources:
AS 2919: Protective clothing
AS 2161: Gloves
AS 1337: Eye protection
AS 1715: Respiratory protection
Standard precautionary measures for handling chemicals are to be observed.
Keep away from food, beverages and animal feed.
Instantly remove any soiled and impregnated garments.
Wash hands during breaks and at the end of work.
Avoid contact with the eyes and skin.
Do not eat or drink while working.
· **Breathing equipment:** Not required.
· **Protection of hands:**
· **Penetration time of glove material**
The exact time limit until penetration has to be found out from the manufacturer of the protective gloves; please ensure that this value is not exceeded.

(Contd. on page 4)

Safety Data Sheet
according to WHS Regulations

Printing date 30.09.2022 Version number 1 Revision: 30.09.2022

Trade name Jowat 950.82

(Contd. from page 3)

· **Gloves made of the following material are suitable for the permanent contact with this material in work areas which do not have an above-average risk of injury (e.g. laboratories):**
Plastic gloves
· **For the permanent contact gloves made of the following materials are suitable:** Plastic gloves
· **Not suitable are gloves made of the following materials:**
Leather gloves
Strong gloves
· **Eye protection:**
Safety glasses recommended during refilling and spraying.
Safety glasses

*
9 Physical and Chemical Properties

· **Information on basic physical and chemical properties**	
· **General Information**	
· **Appearance:**	
· **Form:**	Fluid
· **Colour:**	Silver-coloured
· **Smell:**	Alcohol-like
· **Odour threshold:**	Not determined.
· **pH-value at 20 °C:**	8
· **Change in condition**	
· **Melting point/freezing point:**	Not determined
· **Initial boiling point and boiling range:**	78 °C
· **Flash point:**	30 °C
· **Inflammability (solid, gaseous)**	Flammable.
· **Ignition temperature:**	455 °C
· **Decomposition temperature:**	Not determined.
· **Spontaneous combustion:**	Product does not undergo spontaneous combustion.
· **Explosive properties:**	Product is not explosive. However, formation of explosive air/ steam mixtures is possible.
· **Critical values for explosion:**	
· **Lower:**	1.3 Vol %
· **Upper:**	44 Vol %
· **Vapour pressure at 20 °C:**	128 hPa
· **Density at 20 °C**	1.2 g/cm³
· **Relative density**	Not determined.
· **Vapour density**	Not determined.
· **Evaporation rate**	Not determined.
· **Solubility in / Miscibility with**	
· **Water:**	Not determined.
· **distribution ratio (n-octanol/water):**	Not determined.
· **Viscosity:**	
· **dynamic at 20 °C:**	510 mPas
· **kinematic:**	Not determined.
· **Solvent content:**	
· **Organic solvents:**	25.2 %
· **Solid content:**	57.0 %

(Contd. on page 5)

Safety Data Sheet
according to WHS Regulations

Printing date 30.09.2022 Version number 1 Revision: 30.09.2022

Trade name Jowat 950.82

(Contd. from page 4)

· **Other information**
· **VOC - Volatile Organic Compounds**

· **European Union**	25.20 %
· **Switzerland**	25.20 %
· **U.S.A (less water and less exempts)**	302.4 g/l / 2.52 lb/gal

10 Stability and Reactivity

· **Reactivity** No further relevant information available.
· **Chemical stability**
· **Thermal decomposition / conditions to be avoided:**
No decomposition if used according to specifications.
· **Possibility of hazardous reactions**
Reacts with strong acids and alkali
Forms flammable gases / fumes
· **Conditions to avoid** No further relevant information available.
· **Incompatible materials:** No further relevant information available.
· **Hazardous decomposition products:**
Inflammable gases/vapours
Carbon monoxide and carbon dioxide

* 11 Toxicological Information

· **Information on toxicological effects**

· **Acute toxicity**

· **LD/LC50 values that are relevant for classification:**		
64-17-5 ethanol		
Oral	LD50 oral	6,200 mg/kg (rat)
Dermal	LD50 dermal	20,000 mg/kg (rabbit)
Inhalative	LC50 / 4 h	95.6 mg/l (rat)

· **Primary irritant effect:**
· **to the skin:** No irritant effect.
· **to the eye:** Irritant effect.
· **Respiratory or skin sensitisation** No sensitizing effect known.
· **Additional toxicological information:**
The product shows the following dangers according to the calculation method of the General EC Classification Guidelines for Preparations (Directive 1999/45/EC of the European Parliament and of the Council) as issued in the latest version:
Irritant

12 Ecological Information

· **Toxicity**

· **Aquatic toxicity:**	
64-17-5 ethanol	
LC50 / 96 h	10,000 mg/l (zebrafish)
LC50 / 48 h	10,000 mg/l (orfe (ide))
EC50 / 48 h	9,268 mg/l (water flea)

· **Persistence and degradability** No further relevant information available.
· **Behaviour in environmental systems:**
· **Bioaccumulative potential** No further relevant information available.
· **Mobility in soil** No further relevant information available.

(Contd. on page 6)

Safety Data Sheet
according to WHS Regulations

Printing date 30.09.2022 Version number 1 Revision: 30.09.2022

Trade name Jowat 950.82

(Contd. from page 5)

· **Additional ecological information:**
· **General notes:**
Water hazard class 1 (Self-assessment): slightly hazardous for water.
Do not allow the product to reach ground water, open water or the sewer system, undiluted or in large quantites.
· **Results of PBT and vPvB assessment**
· **PBT:** Not applicable.
· **vPvB:** Not applicable.
· **Other adverse effects** No further relevant information available.

13 Disposal considerations

· **Waste treatment methods**
· **Recommendation**
Must not be disposed of together with household garbage. Do not allow product to reach sewage system.
Hand over to disposers of hazardous waste.

· **Uncleaned containers/packaging material:**
· **Recommendation:**
Packagings that cannot be cleaned are to be disposed of in the same manner as the product.
Empty contaminated packagings thoroughly. They can be recycled after thorough and proper cleaning.
Packaging with cured adhesive residues can be recycled.
Packaging with cured adhesive residues can be treated as household waste.

14 Transport information

· **UN-Number**	
· **ADG, IMDG, IATA**	UN1993
· **UN proper shipping name**	
· **ADG**	1993 FLAMMABLE LIQUID, N.O.S. 1993 ENTZÜNDBARER FLÜSSIGER STOFF, N.A.G.
· **IMDG**	FLAMMABLE LIQUID, N.O.S.
· **IATA**	FLAMMABLE LIQUID, N.O.S. (ETHANOL)
· **Transport hazard class(es)**	
· **ADG**	
· **Class**	3 (F1) Flammable liquids.
· **Label**	3
· **IMDG, IATA**	
· **Class**	3 Flammable liquids.
· **Label**	3
· **Packing group**	
· **ADG, IMDG, IATA**	III
· **Environmental hazards:**	Not applicable.
· **Special precautions for user**	Warning: Flammable liquids.
· **Kemler Number:**	30
· **EMS Number:**	F-E,S-E

(Contd. on page 7)

Safety Data Sheet
according to WHS Regulations

Printing date 30.09.2022 Version number 1 Revision: 30.09.2022

Trade name Jowat 950.82

(Contd. from page 6)

· **Stowage Category**	A
· **Transport in bulk according to Annex II of Marpol and the IBC Code**	Not applicable.
· **Transport/Additional information:**	
· **ADG**	
· **Limited quantities (LQ)**	5L
· **Excepted quantities (EQ)**	Code: E1 Maximum net quantity per inner packaging: 30 ml Maximum net quantity per outer packaging: 1000 ml
· **Transport category**	3
· **Tunnel restriction code**	D/E
· **IMDG**	
· **Limited quantities (LQ)**	5L
· **Excepted quantities (EQ)**	Code: E1 Maximum net quantity per inner packaging: 30 ml Maximum net quantity per outer packaging: 1000 ml
· **UN "Model Regulation":**	UN 1993 FLAMMABLE LIQUID, N.O.S. 3, III
· **Transport of dangerous goods: National Regulations**	Dangerous Goods Class 3 according to the Australian Dangerous Goods Code (ADG 7) for transport by Road and Rail.

15 Regulatory information

· **Safety, health and environmental regulations/legislation specific for the substance or mixture**

· **Australian Inventory of Chemical Substances (AICS): (Substances not listed)**

All ingredients are listed.

· **Standard for the Uniform Scheduling of Medicines and Poisons**

108-46-3	resorcinol	S6

· **Chemical safety assessment**
· **Seveso category** P5c FLAMMABLE LIQUIDS
· **Qualifying quantity (tonnes) for the application of lower-tier requirements** 5,000 t
· **Qualifying quantity (tonnes) for the application of upper-tier requirements** 50,000 t

· **National regulations**
· **Other regulations, limitations and prohibitive regulations**
Occupational Safety and Health regulations 1996 (especially part 5) (Update 01/2013)
AS / NZS 1337:1992 Eye protectors for industrial applications
AS / NZS 2161.2:2005 Occupational protective gloves-General Requirements
AS / NZS 2162.10.3:2005 Occupational protective gloves-Protective gloves against chemicals and micro-organisms-Determination of resistance against permeation by chemicals
AS / NZS 4501.1:2008 Occupational protective clothing- Guidelines on the selection, use, care and maintenance of protecting clothing
AS 3765-1990 Clothing for protection against hazardous chemicals
BS / EN 50176: 2009 Stationary electrostatic application equipment for ignitable liquid coating material
BS/ EN 50495:2010 Safety devices required for the safe functioning of equipment with respect to explosion risks
BS EN 1127-1:2011 Explosive atmospheres. Explosion prevention and protection. Basic concepts and methodology
BS EN 15233:2007 Methodology for functional safety assessment of protective systems for potentially explosive atmospheres

· **Chemical safety assessment:** A Chemical Safety Assessment has not been carried out.

16 Other information

These data are based on our present knowledge. They shall, however, not constitute a guarantee for any specific product features and shall not establish a legally valid contractual relationship.

(Contd. on page 8)

Safety Data Sheet
according to WHS Regulations

(Contd. from page 7)

All standard industrial precautions apply, concerning protection of health, and safe handling. The recommendations have to be examined in the context of the application for which the product is intended, and observed as necessary.

· **Relevant phrases**
H225 Highly flammable liquid and vapour.

· **Abbreviations and acronyms:**
ADR: Accord relatif au transport international des marchandises dangereuses par route (European Agreement Concerning the International Carriage of Dangerous Goods by Road)
IMDG: International Maritime Code for Dangerous Goods
IATA: International Air Transport Association
EINECS: European Inventory of Existing Commercial Chemical Substances
ELINCS: European List of Notified Chemical Substances
CAS: Chemical Abstracts Service (division of the American Chemical Society)
LC50: Lethal concentration, 50 percent
LD50: Lethal dose, 50 percent
PBT: Persistent, Bioaccumulative and Toxic
SVHC: Substances of Very High Concern
vPvB: very Persistent and very Bioaccumulative
Flam. Liq. 2: Flammable liquids – Category 2
Flam. Liq. 3: Flammable liquids – Category 3
Eye Irritation 2A: Serious eye damage/eye irritation – Category 2A

· *** Data modified in comparison to the previous version.**

Safety Data Sheet
according to WHS Regulations

Printing date 01.07.2020 Version number 1 Revision: 30.06.2020

Hazardous according to criteria of Australian Safety and Compensation Council.

* 1 Identification

· **Product identifier**
· **Trade name Jowat Hardener 950.86**
· **Relevant identified uses of the substance or mixture and uses advised against**
No further relevant information available.
· **Application of the substance / the mixture**
Hardener/ Curing agent
Cross-linker
· **Uses advised against** Restricted to professional users.

· **Details of the supplier of the safety data sheet**
· **Manufacturer/Supplier:**
Jowat Universal Adhesives Pty. Ltd.
2/12 Kerr Road
Ingleburn, NSW 2565
Tel.: +612 9605 3477
Fax: +612 9605 8477
Mobil: +61 435 093524
E-Mail: shane.devereaux@jowatpacific.com
· **Department issuing data specification sheet:**
Environmental management
Tel. +49 5231 749 -218 / -211 / -5460 / -5374
e-mail: umweltmanagement@jowat.de
· **Department providing the information:**
Jowat Universal Adhesives Australia Pty., Ltd
2/12 Kerr Road, Ingleburn, NSW Australia 2565
PO Box 687 Ingleburn NSW Australia 1890
Phone: +61 2 9605 3477
info@jowatpacific.com
· **Emergency telephone number:**
InfraServ Hoechst - Gefahrenabwehrmeldezentrale
D - 65926 Frankfurt
Fon: +49 (0)69-305-6418
131 126 (Poisons Information Centre)

* 2 Hazard(s) Identification

· **Classification of the substance or mixture**

health hazard

Carc. 2	H351	Suspected of causing cancer.
STOT RE 2	H373	May cause damage to the kidneys, the heart and the nervous system through prolonged or repeated exposure. Route of exposure: Oral.

corrosion

Eye Dam. 1	H318	Causes serious eye damage.

Acute Tox. 4	H332	Harmful if inhaled.
Skin Irrit. 2	H315	Causes skin irritation.
Skin Sens. 1	H317	May cause an allergic skin reaction.

(Contd. on page 2)

Safety Data Sheet
according to WHS Regulations

Printing date 01.07.2020 Version number 1 Revision: 30.06.2020

Trade name Jowat Hardener 950.86

(Contd. from page 1)

Acute Tox. 5 H303 May be harmful if swallowed.
Aquatic Acute 3 H402 Harmful to aquatic life.

· **Label elements**
· **GHS label elements**
The product is classified and labelled according to the Globally Harmonised System (GHS).
· **Hazard pictograms**

GHS05 GHS07 GHS08

· **Signal word** Danger

· **Hazard-determining components of labelling:**
ethane-1,2-diol
paraformaldehyde
Fuller' Earth
· **Hazard statements**
H303 May be harmful if swallowed.
H332 Harmful if inhaled.
H315 Causes skin irritation.
H318 Causes serious eye damage.
H317 May cause an allergic skin reaction.
H351 Suspected of causing cancer.
H373 May cause damage to the kidneys, the heart and the nervous system through prolonged or repeated exposure. Route of exposure: Oral.
H402 Harmful to aquatic life.
· **Precautionary statements**

P260	Do not breathe dust/fume/gas/mist/vapours/spray.
P280	Wear protective gloves/protective clothing/eye protection/face protection.
P305+P351+P338	IF IN EYES: Rinse cautiously with water for several minutes. Remove contact lenses, if present and easy to do. Continue rinsing.
P310	Immediately call a POISON CENTER/doctor.
P362+P364	Take off contaminated clothing and wash it before reuse.
P501	Dispose of contents / container to approved waste disposal or recycling in accordance with national regulations.

· **Other hazards**
· **Results of PBT and vPvB assessment**
· **PBT:** Not applicable.
· **vPvB:** Not applicable.

3 Composition and Information on Ingredients

· **Chemical characterisation: Mixtures**
· **Description:** cross linking agent

· **Dangerous components:**		
107-21-1	ethane-1,2-diol STOT RE 2, H373; Acute Tox. 4, H302	>50%
30525-89-4	paraformaldehyde Flam. Sol. 2, H228; Carc. 2, H351; Eye Dam. 1, H318; Acute Tox. 4, H302; Acute Tox. 4, H332; Skin Irrit. 2, H315; Skin Sens. 1, H317	10-<15%
8031-18-3	Fuller' Earth Aquatic Acute 1, H400; Aquatic Chronic 2, H411; Acute Tox. 4, H302	1-<2.5%

· **SVHC** Not applicable.

(Contd. on page 3)

Safety Data Sheet
according to WHS Regulations

Printing date 01.07.2020 Version number 1 Revision: 30.06.2020

Trade name Jowat Hardener 950.86

(Contd. from page 2)

· **Additional information**
If any R-phrases (risk-phrases) are listed, please refer for the exact wording to section 16.

*
4 First Aid Measures

· **Description of first aid measures**
· **General information**
Instantly remove any clothing soiled by the product.
Symptoms of poisoning may even occur after several hours; therefore medical observation for at least 48 hours after the accident.
· **After inhalation**
Supply fresh air and contact physician for safety reasons.
In case of unconsciousness bring patient into stable side position for transport.
Supply fresh air; consult physician in case of symptoms.
· **After skin contact** Instantly wash with water and soap and rinse thoroughly.
· **After eye contact** Rinse opened eye for several minutes under running water. Then consult physician.
· **After swallowing** In case of persistent symptoms consult physician.
· **Information for physician**
· **Most important symptoms and effects, both acute and delayed**
No further relevant information available.
· **Indication of any immediate medical attention and special treatment needed**
No further relevant information available.

*
5 Fire Fighting Measures

· **Extinguishing media**
· **Suitable extinguishing agents**
CO_2, extinguishing powder or water jet. Fight larger fires with water jet or alcohol-resistant foam.
· **For safety reasons unsuitable extinguishing agents** Water with a full water jet.
· **Special hazards arising from the substance or mixture**
Formation of poisonous gases during heating or in fires.
Can be released in case of fire
Nitrogen oxides (NOx)
Carbon monoxide (CO)
· **Advice for firefighters**
· **Protective equipment:**
Wear self-contained breathing apparatus.
Put on breathing apparatus.
Do not inhale explosion gases or combustion gases.

6 Accidental Release Measures

· **Personal precautions, protective equipment and emergency procedures** Wear protective clothing.
· **Environmental precautions:**
Do not allow product to reach sewage system or water bodies.
Inform respective authorities in case product reaches water or sewage system.
Prevent from spreading (e.g. by damming-in or oil barriers).
· **Methods and material for containment and cleaning up:**
Absorb with liquid-binding material (sand, diatomite, acid binders, universal binders, sawdust).
Use neutralising agent.
Dispose of contaminated material as waste according to item 13.
Ensure adequate ventilation.
· **Reference to other sections**
See Section 7 for information on safe handling
See Section 8 for information on personal protection equipment.
See Section 13 for information on disposal.

(Contd. on page 4)

Safety Data Sheet
according to WHS Regulations

Printing date 01.07.2020 Version number 1 Revision: 30.06.2020

Trade name Jowat Hardener 950.86

(Contd. from page 3)

7 Handling and Storage

· **Handling**
· **Precautions for safe handling**
Store in cool, dry place in tightly closed containers.
Ensure good ventilation/extraction system at the workplace.
Prevent formation of aerosols.
· **Information about protection against explosions and fires:** Keep breathing equipment ready.

· **Conditions for safe storage, including any incompatibilities**
· **Storage**
· **Requirements to be met by storerooms and containers:** Prevent any penetration into the ground.
· **Information about storage in one common storage facility:** Not required.
· **Further information about storage conditions:** None.
· **Storage class** 10
· **Specific end use(s)** No further relevant information available.

*
8 Exposure controls and personal protection

· **Control parameters**

· **Components with critical values that require monitoring in the workplace:**	
107-21-1 ethane-1,2-diol	
WES	Short-term value: 104** mg/m³, 40** ppm Long-term value: 10* 52** mg/m³, 20** ppm Sk;*particulate;**vapour

· **Additional information:** The lists that were valid during the compilation were used as basis.

· **Exposure controls**
· **Additional information about design of technical systems:** No further data; see item 7.
· **Personal protective equipment**
· **General protective and hygienic measures**
To ensure proper protection for any given situation, seek guidance from the following sources:
AS 2919: Protective clothing
AS 2161: Gloves
AS 1337: Eye protection
AS 1715: Respiratory protection
Standard precautionary measures for handling chemicals are to be observed.
Keep away from food, beverages and animal feed.
Instantly remove any soiled and impregnated garments.
Wash hands during breaks and at the end of work.
Store protective clothing separately.
Do not inhale gases / fumes / aerosols.
Avoid contact with the eyes and skin.
Do not eat or drink while working.
· **Breathing equipment:**
Use breathing protection in case of insufficient ventilation (EN 14387).
Filter A/B/P2.
In case of brief exposure or low pollution use breathing filter apparatus (EN 136). In case of intensive or longer exposure use breathing apparatus that is independent of circulating air (EN 137).
· **Protection of hands:** Impervious gloves (EN 374).
· **Penetration time of glove material**
The exact time limit until penetration has to be found out from the manufacturer of the protective gloves; please ensure that this value is not exceeded.
· **Gloves made of the following material are suitable for the permanent contact with this material in work areas which do not have an above-average risk of injury (e.g. laboratories):**
Butyl rubber, BR
· **For the permanent contact gloves made of the following materials are suitable:**
Butyl rubber, BR

(Contd. on page 5)

Safety Data Sheet
according to WHS Regulations

Printing date 01.07.2020 Version number 1 Revision: 30.06.2020

Trade name Jowat Hardener 950.86

(Contd. from page 4)

· **For permanent contact of max. 15 minutes, gloves made of the following materials are suitable:**
Nitrile rubber, NBR
· **To protect against splashing, gloves made of the following materials are suitable:**
Chloroprene rubber, CR
· **Not suitable are gloves made of the following materials:**
Natural rubber, NR
Leather gloves
Strong gloves
· **Eye protection:**
Tightly sealed safety glasses (EN 166).
Safety glasses

9 Physical and Chemical Properties

· **Information on basic physical and chemical properties**	
· **General Information**	
· **Appearance:**	
· **Form:**	Fluid
· **Colour:**	Brown
· **Smell:**	Characteristic
· **Odour threshold:**	Not determined.
· **pH-value:**	Not determined.
· **Change in condition**	
· **Melting point/freezing point:**	Not determined
· **Initial boiling point and boiling range:**	Not determined
· **Flash point:**	>95 °C
· **Inflammability (solid, gaseous)**	Not applicable.
· **Ignition temperature:**	380 °C
· **Decomposition temperature:**	Not determined.
· **Spontaneous combustion:**	Product does not undergo spontaneous combustion.
· **Explosive properties:**	Product is not explosive.
· **Critical values for explosion:**	
· **Lower:**	3.2 Vol %
· **Upper:**	70 Vol %
· **Vapour pressure at 20 °C:**	23 hPa
· **Density at 20 °C**	1.4 g/cm³
· **Relative density**	Not determined.
· **Vapour density**	Not determined.
· **Evaporation rate**	Not determined.
· **Solubility in / Miscibility with**	
· **Water:**	Not determined.
· **distribution ratio (n-octanol/water):**	Not determined.
· **Viscosity:**	
· **dynamic:**	Not determined.
· **kinematic at 20 °C:**	6,500 mm²/s
· **Solvent content:**	
· **Solid content:**	45.0 %
· **Other information**	No further relevant information available.

(Contd. on page 6)

Safety Data Sheet
according to WHS Regulations

Printing date 01.07.2020 Version number 1 Revision: 30.06.2020

Trade name Jowat Hardener 950.86

(Contd. from page 5)

· **VOC - Volatile Organic Compounds**	
· **European Union**	0.00 %
· **Switzerland**	0.00 %
· **U.S.A (less water and less exempts)**	0.0 g/l / 0.00 lb/gal

10 Stability and Reactivity

· **Reactivity** No further relevant information available.
· **Chemical stability**
· **Thermal decomposition / conditions to be avoided:**
No decomposition if used according to specifications.
· **Conditions to avoid** No further relevant information available.
· **Incompatible materials:** No further relevant information available.
· **Hazardous decomposition products:**
Inflammable gases/vapours
Carbon monoxide and carbon dioxide

* 11 Toxicological Information

· **Information on toxicological effects**

· **Acute toxicity**

· **LD/LC50 values that are relevant for classification:**		
107-21-1 ethane-1,2-diol		
Oral	LD50 oral	4,000 mg/kg (rat)
Dermal	LD50 dermal	9,530 mg/kg (rabbit)
30525-89-4 paraformaldehyde		
Oral	LD50 oral	680 mg/kg (rat)

· **Primary irritant effect:**
· **to the skin:** No irritant effect.
· **to the eye:** Strong irritant with the danger of severe eye injury.
· **Respiratory or skin sensitisation** Sensitization possible by skin contact.
· **Additional toxicological information:**
The product shows the following dangers according to the calculation method of the General EC Classification Guidelines for Preparations (Directive 1999/45/EC of the European Parliament and of the Council) as issued in the latest version:
Harmful
Irritant
· **CMR effects (carcinogenity, mutagenicity and toxicity for reproduction)**
Carc. 2

12 Ecological Information

· **Toxicity**

· **Aquatic toxicity:**	
107-21-1 ethane-1,2-diol	
LC50 / 96 h	27,540 mg/l (bluegill sunfish)
	>18,500 mg/l (rainbow trout)
	8,050 mg/l (fathead minnow)
LC50 / 48 h	>10,000 mg/l (orfe (ide))
EC50 / 48 h	>46,300 mg/l (water flea)
EC50 / 24 h	>10,000 mg/l (water flea)
EC50	>9,500 mg/l (green algae)
	>10,000 mg/l (pseudomonas putida)

(Contd. on page 7)

Safety Data Sheet
according to WHS Regulations

Printing date 01.07.2020 Version number 1 Revision: 30.06.2020

Trade name Jowat Hardener 950.86

(Contd. from page 6)

30525-89-4 paraformaldehyde	
LC50 / 96 h	60 mg/l (orfe (ide))
EC50 / 24 h	42 mg/l (water flea)

· **Persistence and degradability** No further relevant information available.
· **Behaviour in environmental systems:**
· **Bioaccumulative potential** No further relevant information available.
· **Mobility in soil** No further relevant information available.
· **Additional ecological information:**
· **General notes:**
Water hazard class 2 (Self-assessment): hazardous for water.
Do not allow product to reach ground water, water bodies or sewage system.
Must not reach sewage water or drainage ditch undiluted or unneutralised.
Danger to drinking water if even small quantities leak into soil.
· **Results of PBT and vPvB assessment**
· **PBT:** Not applicable.
· **vPvB:** Not applicable.
· **Other adverse effects** No further relevant information available.

13 Disposal considerations

· **Waste treatment methods**
· **Recommendation**
Must not be disposed of together with household garbage. Do not allow product to reach sewage system.
Hand over to disposers of hazardous waste.

· **Uncleaned containers/packaging material:**
· **Recommendation:**
Packagings that cannot be cleaned are to be disposed of in the same manner as the product.
Empty contaminated packagings thoroughly. They can be recycled after thorough and proper cleaning.
Packaging with cured adhesive residues can be recycled.
Packaging with cured adhesive residues can be treated as household waste.

14 Transport information

· **UN-Number**	
· **ADG, ADN, IMDG, IATA**	not applicable
· **UN proper shipping name**	
· **ADG, ADN, IMDG, IATA**	not applicable
· **Transport hazard class(es)**	
· **ADG, ADN, IMDG, IATA**	
· **Class**	not applicable
· **Packing group**	
· **ADG, IMDG, IATA**	not applicable
· **Environmental hazards:**	Not applicable.
· **Special precautions for user**	Not applicable.
· **Transport in bulk according to Annex II of Marpol and the IBC Code**	Not applicable.
· **UN "Model Regulation":**	not applicable
· **Transport of dangerous goods: National Regulations**	Not a Dangerous Good according to the Australian Dangerous Goods Code (ADG 7) for transport by Road and Rail.

(Contd. on page 8)

Safety Data Sheet
according to WHS Regulations

Printing date 01.07.2020 Version number 1 Revision: 30.06.2020

Trade name Jowat Hardener 950.86

(Contd. from page 7)

15 Regulatory information

· **Safety, health and environmental regulations/legislation specific for the substance or mixture**

· **Australian Inventory of Chemical Substances (AICS): (Substances not listed)**
All ingredients are listed.

· **Standard for the Uniform Scheduling of Medicines and Poisons**		
107-21-1	ethane-1,2-diol	S5, S6, S10
30525-89-4	paraformaldehyde	S2, S6, S10

· **Australia: Priority Existing Chemicals**
None of the ingredients is listed.

· **National regulations**
· **Other regulations, limitations and prohibitive regulations**
Occupational Safety and Health regulations 1996 (especially part 5) (Update 01/2013)
AS / NZS 1337:1992 Eye protectors for industrial applications
AS / NZS 2161.2:2005 Occupational protective gloves-General Requirements
AS / NZS 2162.10.3:2005 Occupational protective gloves-Protective gloves against chemicals and micro-organisms-Determination of resistance against permeation by chemicals
AS / NZS 4501.1:2008 Occupational protective clothing- Guidelines on the selection, use, care and maintenance of protecting clothing
AS 3765-1990 Clothing for protection against hazardous chemicals
· **Chemical safety assessment:** A Chemical Safety Assessment has not been carried out.

16 Other information

These data are based on our present knowledge. They shall, however, not constitute a guarantee for any specific product features and shall not establish a legally valid contractual relationship.
All standard industrial precautions apply, concerning protection of health, and safe handling. The recommendations have to be examined in the context of the application for which the product is intended, and observed as necessary.

· **Relevant phrases**
H228 Flammable solid.
H302 Harmful if swallowed.
H315 Causes skin irritation.
H317 May cause an allergic skin reaction.
H318 Causes serious eye damage.
H332 Harmful if inhaled.
H351 Suspected of causing cancer.
H373 May cause damage to the kidneys, the heart and the nervous system through prolonged or repeated exposure. Route of exposure: Oral.
H400 Very toxic to aquatic life.
H411 Toxic to aquatic life with long lasting effects.
· **Abbreviations and acronyms:**
ADR: Accord européen sur le transport des marchandises dangereuses par Route (European Agreement concerning the International Carriage of Dangerous Goods by Road)
IMDG: International Maritime Code for Dangerous Goods
IATA: International Air Transport Association
EINECS: European Inventory of Existing Commercial Chemical Substances
ELINCS: European List of Notified Chemical Substances
CAS: Chemical Abstracts Service (division of the American Chemical Society)
LC50: Lethal concentration, 50 percent
LD50: Lethal dose, 50 percent
PBT: Persistent, Bioaccumulative and Toxic
SVHC: Substances of Very High Concern
vPvB: very Persistent and very Bioaccumulative
Flam. Sol. 2: Flammable solids – Category 2
Acute Tox. 4: Acute toxicity - oral – Category 4
Acute Tox. 5: Acute toxicity - oral – Category 5
Skin Irrit. 2: Skin corrosion/irritation – Category 2
Eye Dam. 1: Serious eye damage/eye irritation – Category 1
Skin Sens. 1: Skin sensitisation – Category 1
Carc. 2: Carcinogenicity – Category 2

(Contd. on page 9)

Safety Data Sheet
according to WHS Regulations

Printing date 01.07.2020 Version number 1 Revision: 30.06.2020

Trade name Jowat Hardener 950.86

(Contd. from page 8)

STOT RE 2: Specific target organ toxicity (repeated exposure) – Category 2
Aquatic Acute 1: Hazardous to the aquatic environment - acute aquatic hazard – Category 1
Aquatic Acute 3: Hazardous to the aquatic environment - acute aquatic hazard – Category 3
Aquatic Chronic 2: Hazardous to the aquatic environment - long-term aquatic hazard – Category 2

· *** Data modified in comparison to the previous version.**

[illegible]

[illegible]

[illegible]

[illegible]

[illegible]

[illegible] R[illegible] Resin [illegible]it[illegible] [illegible] Li[illegible]id [illegible]ardener is a res[illegible]r[illegible]n[illegible] [illegible]rmalde[illegible]de ad[illegible]esi[illegible]e s[illegible]stem t[illegible]at is mainl[illegible] [illegible]sed in t[illegible]e man[illegible]a[illegible]t[illegible]re [illegible]laminated [illegible]den str[illegible]t[illegible]res[illegible] It is als[illegible] [illegible]sed in [illegible]at [illegible]ilding[illegible]r [illegible]r[illegible]d[illegible]ts e[illegible]sed t[illegible] [illegible]ig[illegible] [illegible]midit[illegible]s[illegible] as [illegible]ind[illegible]s and [illegible]ter d[illegible]rs[illegible]and [illegible]r [illegible]r[illegible]d[illegible]ts [illegible]sed [illegible]td[illegible]rs[illegible]s[illegible] as garden [illegible]rnit[illegible]re[illegible]la[illegible]gr[illegible]nd e[illegible]i[illegible]ment[illegible]et[illegible]

T[illegible]is s[illegible]stem [illegible]m[illegible]lies [illegible]it[illegible] [illegible]S[illegible] [illegible]S[illegible]and S[illegible]BS [illegible]lass [illegible] as a str[illegible]t[illegible]ral ga[illegible]illing ad[illegible]esi[illegible]e [illegible]r l[illegible]ad [illegible]earing a[illegible]li[illegible]ati[illegible]ns in ser[illegible]i[illegible]e [illegible]lass [illegible]en[illegible]ir[illegible]nments[illegible] [illegible]a[illegible] [illegible]at[illegible] is tested [illegible]t[illegible]e S[illegible]t[illegible] [illegible]ri[illegible]an B[illegible]rea[illegible] [illegible]Standards [illegible]r [illegible]m[illegible]lian[illegible]e [illegible]it[illegible] t[illegible]is s[illegible]e[illegible]i[illegible]ati[illegible]n[illegible]

[illegible] [illegible] [illegible]arts [illegible]y [illegible]eig[illegible]t
[illegible] [illegible] [illegible]art [illegible]y [illegible]eig[illegible]t

[illegible]m[illegible]nents s[illegible]l[illegible]d [illegible]e a[illegible]l[illegible]ratel[illegible] [illegible]eig[illegible]ed [illegible]n a s[illegible]ita[illegible]le s[illegible]ale [illegible]i[illegible] s[illegible]l[illegible]d [illegible]a[illegible]e a t[illegible]tal [illegible]a[illegible]a[illegible]it[illegible]n[illegible]t greater t[illegible]an ten times t[illegible]e am[illegible]nt t[illegible] [illegible]e [illegible]eig[illegible]ed[illegible] Mi[illegible]ing [illegible]l[illegible] [illegible]l[illegible]me s[illegible]l[illegible]d [illegible]e a[illegible]ided[illegible] Mi[illegible]ing e[illegible]i[illegible]ment s[illegible]l[illegible]d [illegible]e made [illegible]glass[illegible]steel [illegible]r [illegible]lasti[illegible] [illegible]in[illegible]al[illegible]mini[illegible]m [illegible]r [illegible]l[illegible]l[illegible]er [illegible]ntainers s[illegible]l[illegible]d [illegible]e a[illegible]ided[illegible] Mi[illegible]ing s[illegible]l[illegible]d [illegible]ntin[illegible] [illegible]ntil n[illegible] l[illegible]m[illegible]s remain and t[illegible]e material is [illegible]m[illegible]letel[illegible] [illegible]m[illegible]gene[illegible]s[illegible] Me[illegible]ani[illegible]al mi[illegible]ing s[illegible]l[illegible]d [illegible]e [illegible]sed [illegible]r mi[illegible]es greater t[illegible]an [illegible]g[illegible] Ideall[illegible] mi[illegible]ed material s[illegible]l[illegible]d t[illegible]en [illegible]e le[illegible]t [illegible]r [illegible] min[illegible]tes and re[illegible]stirred [illegible]rie[illegible] [illegible]e[illegible]re [illegible]se[illegible]

[illegible]l[illegible]a[illegible]s [illegible]se t[illegible]e [illegible]ldest [illegible]r[illegible]d[illegible]t [illegible]irst [illegible]r[illegible]tating st[illegible] reg[illegible]larl[illegible]

[illegible]ll data indi[illegible]ated are [illegible]ara[illegible]teristi[illegible]s re[illegible]resented as a[illegible]erage [illegible]al[illegible]es[illegible] [illegible]r te[illegible]ni[illegible]al data s[illegible]eets are [illegible]nstantl[illegible] re[illegible]ised t[illegible] re[illegible]resent t[illegible]e latest state [illegible]te[illegible]n[illegible]g[illegible] T[illegible]is editi[illegible]n is re[illegible]la[illegible]ing all [illegible]re[illegible]i[illegible]s [illegible]nes[illegible]and is [illegible]alid [illegible]n t[illegible]e date [illegible]m[illegible]lati[illegible]n[illegible]

[illegible]ll [illegible]r[illegible]r[illegible]d[illegible]r[illegible]r[illegible]d[illegible] [illegible]err Rd[illegible]Ingle[illegible]rn [illegible]S[illegible] [illegible]stralia [illegible]P[illegible]ne[illegible]

□□ □□□□□□□□

T□is is de□endent □□□n a n□m□er □□□a□t□rs□in□l□ding am□ient tem□erat□re□si□e □□mi□and a□□li□at□r□ T□e □□ll□□ing □ig□res □□r □sa□le li□e at □ari□□s tem□erat□res ma□ □e □sed as a g□ide t□ □□at ma□ □e e□□e□ted in □ra□ti□e□

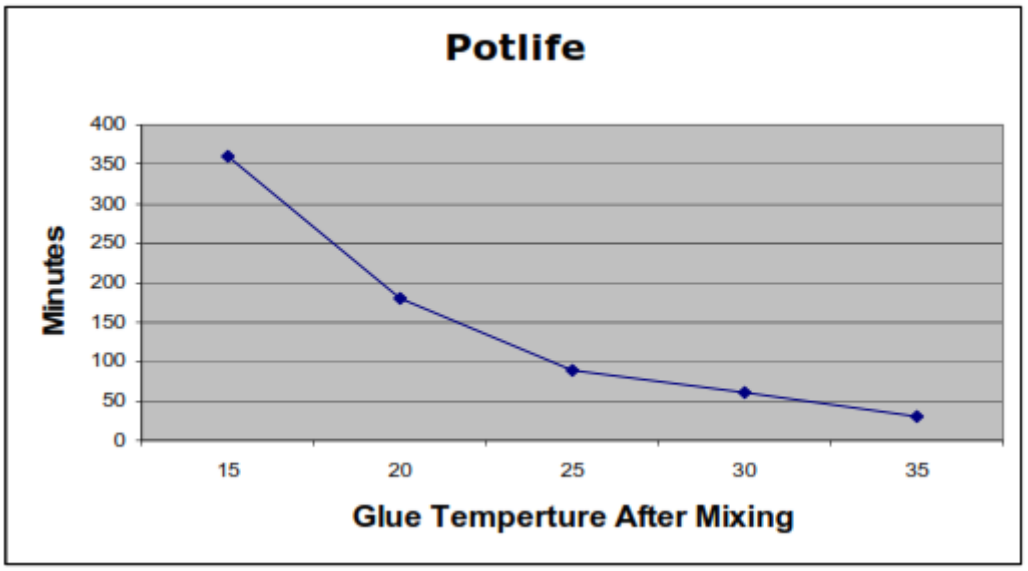

T□e a□□□e times re□er t□ □sa□le li□e □□t□e gl□e mi□ □□ile in a □□ntainer □r mi□ing □esel□ □se □□a mechanical glue spreading machine is liable to reduce those times by ⅓ due to the action of the rollers. Mi□si□e s□□□ld □e s□□□ as t□ ens□re t□at all material is □sed □it□in t□is □eri□d□

□R□□□R□□□□□ □ □□□ □□□ □□□ □□M□□

T□e □□□□□□□ R□ Resin □□□□□□□□ □ardener s□stem is a t□ □ □art s□stem □it□ □illers in□r□□rated□ T□e re□□mmended rati□ □□resin □□ardener is □□□ □□ □eig□t □it□ an all□□a□le range □□□□□□ – □□□ □arts resin t□ □ □art □□□□der □ardener □□ □eig□t□ T□is rati□ is □riti□al t□ t□e □er□□rman□e □□t□e ad□esi□e and m□st □e □□e□□ed □□antitati□el□d□ring □r□d□□ti□n□ It is im□□rtant t□at t□e resin and □ardener □□antities are determined □□ □eig□t n□t □□l□me□

I□□at□□ mi□ing□t□e □ardener s□□□ld □e added t□ t□e resin and stirred □□r □ □□ min□tes □ntil a sm□□t□ mi□is □□tained□ Mi□ing □an □e □arried □□t in □□ntainers □□steel□glass□□ □□d □r in gal□anised □r tinned □essels□ □□□□er and □rass m□st n□t □e □sed□ □n □□ a□□□□□nt s□□□ld le□t□□er gl□e □e in□r□□rated int□ t□e ne□t mi□□

□□□□□□□□□□□ll data indi□ated are □□ara□teristi□s re□resented as a□erage □al□es□□ □r te□□ni□al data s□eets are □□nstantl□ re□ised t□ re□resent t□e latest state □□te□□n□l□g□□T□is editi□n is re□la□ing all □re□i□□s □nes□and is □alid □n t□e date □□□□m□lati□n□
□□□□□□□r□□□r□□□□□□□□□□□□□□□□□□r□dd□□□□□□□□□□□□r□ □□□□□□

[illegible]

T[illegible]e [illegible]is[illegible]sit[illegible] [illegible]R[illegible] Resin[illegible] [illegible]ardener and t[illegible]e res[illegible]lting gl[illegible]e mi[illegible]is [illegible]red[illegible]minantl[illegible]de[illegible]endent [illegible][illegible]n tem[illegible]erat[illegible]re[illegible]t [illegible]ig[illegible] tem[illegible]erat[illegible]res t[illegible]e ad[illegible]esi[illegible]es [illegible]a[illegible]e a m[illegible][illegible]l[illegible]er [illegible]is[illegible]sit[illegible]and [illegible][illegible]nse[illegible]entl[illegible]are t[illegible]in and [illegible]ill r[illegible]n[illegible]t l[illegible] tem[illegible]erat[illegible]res t[illegible]e [illegible]is[illegible]sit[illegible]is m[illegible][illegible] [illegible]ig[illegible]er [illegible]a[illegible]sing t[illegible]e ad[illegible]esi[illegible]e t[illegible] t[illegible]i[illegible]en[illegible]T[illegible]is [illegible]an res[illegible]lt in [illegible][illegible]m[illegible]ing and a[illegible][illegible]li[illegible]ati[illegible]n [illegible]r[illegible][illegible]lems[illegible]lt is generall[illegible]re[illegible][illegible]mmended t[illegible]at [illegible][illegible][illegible][illegible]R[illegible] Resin and t[illegible]e res[illegible]lting gl[illegible]e mi[illegible]e maintained at [illegible][illegible][illegible] t[illegible] all[illegible] [illegible][illegible]nsistent and e[illegible]i[illegible]ient gl[illegible]ing[illegible][illegible]te t[illegible]at it is [illegible]r[illegible][illegible][illegible][illegible]t[illegible]at tem[illegible]erat[illegible]res are re[illegible][illegible]rded [illegible]r [illegible]is[illegible][illegible]sit[illegible]meas[illegible]rements[illegible]

[illegible]R[illegible][illegible]R[illegible][illegible][illegible][illegible][illegible][illegible][illegible][illegible][illegible][illegible]D

[illegible][illegible]r e[illegible]i[illegible]ient gl[illegible]ing t[illegible]e m[illegible]ist[illegible]re [illegible][illegible]ntent [illegible][illegible]t[illegible]e [illegible][illegible]d s[illegible][illegible][illegible]ld [illegible]e in t[illegible]e range [illegible][illegible] [illegible][illegible][illegible][illegible] [illegible]n[illegible]te t[illegible]at t[illegible]is is t[illegible]e minim[illegible]m and ma[illegible]im[illegible]m t[illegible]at is a[illegible][illegible]e[illegible]ta[illegible]le and n[illegible]t an a[illegible]erage[illegible][illegible][illegible]r radi[illegible] re[illegible][illegible]en[illegible][illegible]gl[illegible]ing t[illegible]is m[illegible]ist[illegible]re range s[illegible][illegible][illegible]ld [illegible]e [illegible]l[illegible]sel[illegible][illegible]ntr[illegible]lled at [illegible][illegible] [illegible][illegible][illegible][illegible][illegible]

M[illegible]ist[illegible]re [illegible][illegible]ntents a[illegible][illegible][illegible]e [illegible][illegible][illegible] ma[illegible]lead t[illegible] star[illegible]ed gl[illegible]e [illegible]ints d[illegible]e t[illegible] [illegible][illegible]er [illegible]enetrati[illegible]n [illegible][illegible]t[illegible]e ad[illegible]esi[illegible]e [illegible][illegible]ilst m[illegible]ist[illegible]re [illegible][illegible]ntents [illegible]el[illegible][illegible] [illegible][illegible] [illegible]an [illegible]re[illegible]ent [illegible]enetrati[illegible]n [illegible][illegible]t[illegible]e ad[illegible]esi[illegible]e at all and als[illegible] limit t[illegible]e [illegible]ermissi[illegible]le assem[illegible]l[illegible][illegible]eri[illegible]d[illegible][illegible]arti[illegible][illegible]larl[illegible]at tem[illegible]erat[illegible]res a[illegible][illegible][illegible]e [illegible][illegible][illegible][illegible][illegible]
M[illegible]ist[illegible]re [illegible][illegible]ntents [illegible][illegible]ad[illegible]a[illegible]ent laminati[illegible]ns s[illegible][illegible][illegible]ld n[illegible]t [illegible]ar[illegible] [illegible][illegible]m[illegible]re t[illegible]an [illegible][illegible] and t[illegible]e range [illegible][illegible]m[illegible]ist[illegible]re [illegible][illegible]ntents [illegible][illegible]all laminati[illegible]ns in a [illegible]eam s[illegible][illegible][illegible]ld n[illegible]t e[illegible][illegible]eed [illegible][illegible] [illegible]

M[illegible]ist[illegible]re [illegible][illegible]ntents [illegible][illegible]tside t[illegible]e range s[illegible]e[illegible]ified ma[illegible] [illegible]a[illegible]se dimensi[illegible]nal [illegible][illegible]anges [illegible][illegible]t[illegible] d[illegible]ring t[illegible]e [illegible][illegible]ring [illegible]r[illegible][illegible]ess and [illegible][illegible]en t[illegible]e laminate is in ser[illegible]i[illegible]e[illegible]lt is desira[illegible]le t[illegible] [illegible]se tim[illegible]er [illegible]a[illegible]ing a l[illegible][illegible]er e[illegible][illegible]ili[illegible]ri[illegible]m m[illegible]ist[illegible]re [illegible][illegible]ntent t[illegible]an t[illegible]at li[illegible]el[illegible]t[illegible] [illegible]e attained in ser[illegible]i[illegible]e[illegible]

T[illegible]is s[illegible]stem is n[illegible]t designed [illegible]r re[illegible][illegible]mmended [illegible]r [illegible]se at m[illegible]ist[illegible]re [illegible][illegible]ntents [illegible][illegible]tside [illegible][illegible]t[illegible]e a[illegible][illegible][illegible]e re[illegible][illegible]mmended range[illegible]

[illegible] [illegible][illegible]d s[illegible]r[illegible]a[illegible]es m[illegible]st [illegible]e [illegible]ree [illegible][illegible]d[illegible]st[illegible]dirt[illegible][illegible] a[illegible][illegible]grease and [illegible]t[illegible]er [illegible]reign materials[illegible]T[illegible]e [illegible]est [illegible][illegible]nding is [illegible][illegible]tained [illegible][illegible]en [illegible]inal s[illegible]r[illegible]a[illegible]ing [illegible][illegible]t[illegible]e tim[illegible]er [illegible]as [illegible]een [illegible]er[illegible]rmed immediatel[illegible][illegible]ri[illegible]r t[illegible] gl[illegible]ing s[illegible] t[illegible]at sm[illegible][illegible]t[illegible][illegible] [illegible]lean a[illegible][illegible][illegible]ratel[illegible] [illegible]itting s[illegible]r[illegible]a[illegible]es are [illegible]r[illegible]ided[illegible]S[illegible]r[illegible]a[illegible]es s[illegible][illegible][illegible]ld [illegible]e [illegible]ree [illegible]r[illegible]m raised [illegible]r t[illegible]rn grain[illegible]s[illegible]i[illegible]s[illegible][illegible][illegible]rns[illegible] gla[illegible]e [illegible]r an[illegible] [illegible]t[illegible]er im[illegible]er[illegible]e[illegible]ti[illegible]ns[illegible][illegible] [illegible]i[illegible][illegible] [illegible]ill [illegible]re[illegible]ent g[illegible][illegible]d [illegible][illegible]nta[illegible]t[illegible]Tim[illegible]er [illegible][illegible] [illegible]i[illegible][illegible] is [illegible][illegible][illegible][illegible]ed [illegible]r [illegible]ar[illegible]ed s[illegible] t[illegible]at it [illegible]ill n[illegible]t straig[illegible]ten [illegible][illegible]en [illegible]ress[illegible]re is a[illegible][illegible]lied s[illegible][illegible][illegible]ld n[illegible]t [illegible]e [illegible]sed[illegible]

[illegible][illegible][illegible][illegible][illegible][illegible][illegible]ll data indi[illegible]ated are [illegible][illegible]ara[illegible]teristi[illegible]s re[illegible]resented as a[illegible]erage [illegible]al[illegible]es[illegible][illegible] [illegible]r te[illegible][illegible]ni[illegible]al data s[illegible]eets are [illegible][illegible]nstantl[illegible] re[illegible]ised t[illegible] re[illegible]resent t[illegible]e latest state [illegible][illegible]te[illegible][illegible]n[illegible]g[illegible][illegible]T[illegible]is editi[illegible]n is re[illegible]a[illegible]ing all [illegible]re[illegible]i[illegible]s [illegible]nes[illegible]and is [illegible]alid [illegible]n t[illegible]e date [illegible][illegible][illegible][illegible]m[illegible]lati[illegible]n[illegible]
[illegible][illegible][illegible][illegible][illegible][illegible][illegible][illegible][illegible][

In a□□□rdan□e □it□ t□e □□stralia / New □ealand Standard S□e□i□□ati□n for t□e Man□a□t□re of Gl□e Laminated Tim□er AS/NZS 1328 : 1998, □aminati□ns s□□□ld n□t □e sanded but s□□□ld □e □laned □it□in 72 hou rs □re□eding gl□ing. □ □ilst t□is 72 hou r □eri□d is □s all□satisfa□t□r□ □lease n□te t□at in s□me sit□ati□ns s□□rter time □eri□ds ma□□e re□□ired, for e□am□le □it□ □il- □rne □reser□ati□e treatment, s□me woo d s□e□ies and di□erent □r□d□□ti□n met□□ds. T□e □laner s□□□ld □r□□ide a □lean cut □it□□□t □r□ising □r damaging t□e woo d □i□res.

MANUFACTU RE

GEL □□□M□□□POTLIFE:

□□ter mi□ing, 950.82 R□ Resin / 950.86 □ardener remains li□□id for a limited □eri□d a□ter wh□ch it gels and □e□□me □n□sa□le.

Ta□le 2 below show s t□e im□□rtan□e of □ee□ing t□e gl□e mi□ coo l t□ a□□ie□e a l□nger □□r□ing li□e.

P□t Li□e: T□e estimated □□r□ing li□e □□t□e gl□e mi□. □s all□de□ined as two t□ird s of t□e gel time.

Gel Time: T□e time it ta□es for t□e gl□e mi□ t□ gel. T□is is not t□e □□re time.

GL□□ MI□ T□MP□R□T□R□ (°C)	15	2□	25	30
P□T LI□□ (HOU RS)	3 ¼ - 4	2 – 2 ½	1 – 1 ½	½ - ¾

TABLE □□□: Gl□e mi□ tem□erat□re and □□t li□e □ad□esi□e

□□te t□at pot li□e is als□ de□endent □n □a□t□rs s□ch as t□e re□□l□ing a□ti□n of r□ller t□□e gl□e s□readers. T□is tends t□ □remat□rel□ t□i□□en a gl□e mi□ by □□nstantl□e□□□sing t□e mi□ t□ t□e atm s□□ere and en□□□raging e□a□□rati□n of □ater. □se of □ress□re □□ts als□ s□□rtens t□e pot li□e of a gl□e mi□ signi□i□antl□.

□□□i□ment and □□ntainers s□□□ld □e em□tied and t□□r□□g□l□ □leaned □it□ □□t □ater □□en t□e gl□e mi□ □e□□mes too t□i□□ t□ s□read □r n□l□nger □as s□□□i□ient □□r□ing li□e □r t□e assem□l□ time □eing □sed.

D□ not use 950.82 **□R□□R**esin □□950.86 □□ **□rd□□□r□□□□**temp □ratu**r**es below 15°C as the **□ □□d**hesive may not □ cu**r**e**p**rop □rly.

D□ NOT □ad□□st t□e resin : □ardener rati□ in an attem□t t□ lengt□en □r s□□rten t□e gel time as t□is □an □□se a signi□i□ant ris□ t□ t□e □□nd □□alit□.

SP REA D

Generall□ a s□read of 240 - 420 g□m2 of d□□□le gl□e line is re□□ired. l□□ard□ □□d s□□strates are □sed gl□e s□reads of 240 – 350 g□m2 are a□□e□ta□le □□□e□er for s□t□ □□ds t□e range is t□□i all□ 350 - 420 g□m2 □ased □n a d□□□le mean gl□e line. □s all□ t□e gl□e s□read is s□□□i□ient i□a small and reg□lar am□□nt of s□□ee□e- □t is □□rmed a□ter □ress□re is a□□lied. It is im□□rtant t□at t□e gl□e is a□□lied e□enl□.

T□e □□m□lete □a□□age s□□□ld □e put □nder □ress□re □e□□re t□e s□read s□r□a□e dries out.
Sligt s□□ee□e- □t □r □eading of ad□esi□e al□ng t□e edge of all t□e □ints □□en □ress□re is a□□lied is □s all□ a g□□d indi□ati□n of ade□□ate s□read and t□at t□tal assem□l□ time □as n□t □een e□□eeded. □n t□e □t□er □and, e□□essi□e s□□ee□e- □t ma□ indi□ate t□at t□e assem□l□ time □as too s□□rt, t□e gl□e s□read □as too heavy □r t□e □ress□re too □ig□ – □r □□m□inati□ns of t□ese t□ree □a□t□rs.

02□13 □□□□□ll data indi□ated are □□ara□teristi□s re□resented as a□erage □al□es. Ou r te□□ni□al data s□eets are □□nstantl□ re□ised t□ re□resent t□e latest state of te□□n□l□g□. T□is editi□n is re□la□ing all □re□□□s □nes, and is □alid □n t□e date □□□□m□lati□n□ □□□□□□r□□□r□□□las □□age fo r□dd□□□□□□□□□r□ □□□□□.

Jowa □□□nive rsa □Ad hes □ves Aus □ra□ia □□r□□□□□d□ · 2/2 □err Rd. □ngle□□rn NSW 2 □65 · □□stralia · P□□ne□+□1 □96 □53 □77 □Fax: +61 29 □ 0□□ 47□

S□reading of □nl□ □ne s□r□a□e is a□□e□ta□le in a□□li□ati□ns □ □ere ade□□ate □r□d□□ti□n □□ntr□ls e□ist t□ ens□re t□at t□e assem□l□time, ad□esi□e s□read and a□□li□ati□n of □ress□re are sele□ted t□ ens□re t□at g□□d trans□er of ad□esi□e □m t□e s□read t□ t□e □n□s□read s□r□a□e is □□tained □ □en t□e assem□l□is made. □ □en single s□reading is □sed t□e □□en assem□l□time s□□□ld □e red□□ed by a□out 10% at 25°C and 15 – 20% at 30°C. l□t□e des□ri□ed □r□d□□ti□n □□ntr□ls d□n□t e□ist t□ g□arantee t□is trans□er t□en ad□esi□e s□□□ld □e a□□lied t□ □□t□ s□r□a□es □eing □□nded.

□ea□ier s□reads s□□□ld □e □sed □ □en l□ng assem□l□times are re□□ired. T□e□s□□□ld als□ □e □sed □ □en woo d and r□□m tem□erat□res are a□ov e 25°C □r t□e relati□e □□midit□is less t□an 50%. Lig□ter s□reads s□□□ld □e □sed □n □□ld tim□er.

ASSE MBLY □□M□

□ □en □ssem□l□Time:
T□e time □eri□d d□ring wh□ch t□e gl□e line is e□□□sed t□ t□e air and s□□□e□t t□ e□a□□rati□n (□a□sing dr□- □□t).

□l□sed □ssem□l□Time:
T□e time □eri□d d□ring wh□ch t□e □int is □l□sed bu t n□t □nder □ress□re.

T□tal □ssem□l□Time:
T□e time □eri□d □m t□e s□reading of t□e □irst s□r□a□e □ntil t□e s□stem is □nder □ll □ress□re.

T□e assem□l□time for T□e 950.82 R□ Resin / 950.86 R□ □ardener s□stem □aries □it□ t□e am□□nt of ad□esi□e a□□lied, t□e m□ist□re □□ntent of t□e woo d and □t□er □aria□les in□l□ed. □ □tim□m res□lts are □s□all□ □□tained □ □en t□e □□en assem□l□time is □e□t as s□□rt as □□ssi□le □5 mins is t□e ma□im□m all□□ed) and t□e □l□sed assem□l□time is a minim□m of 10 min□tes. T□tal assem□l□time m□st not e□□eed t□e po□li□e □□t□e gl□e mi□ and □inal □ress□re m□st □e a□□lied □□ilst t□e gl□e□line is still □et. Ta□le 3 □el□□ s□e□□ies t□e ma□im□m all□□a□le assem□l□times at □ari□□s am□ient tem□erat□res.

GL□□ LI□□ T□MP□R□T□R□ (°C)	15	20	25
M□□IM□M □LL□□ □BL□ □SS□MBL□ TIM□ □MI□S)	60	45	30

□
TABLE □□□: □ssem□l□Times □ers□s Tem□erat□re fo□ □5□□□□ R□ Resin □□□□86 R□ □ardener

P**R**ESSU **R**E

T□e □ress□re a□□lied m□st □e ade□□ate t□ □ring all s□r□a□es t□ □e □□nded int□ intimate □□nta□t. T□e n□rmal □ress□re range fo□ s□t□ □□d is 700 - 1000 □Pa. Fo□ □ard□ □□ds □ress□res □et□een 1000 - 1400 □Pa are re□□ired.

□lam□s s□□□ld □e s□a□ed □lse en□g□t□ gi□e a □ni□□m a□□lied □ress□re □□ilst □□lts s□□□ld □e □e□□ed □it□ a t□r□□e □ren□□t□ ens□re t□at s□□i□□ient and □ni□□m □ress□re is a□□lied. l□a large assem□l□is □la□ed in a □eated □□am□er for □□ring, t□e □ress□re s□□□ld □e □□e□□ed se□eral times d□ring t□e □irst hou□ of □eating and s□□□ld □e ad□□sted i□ne□essar□. A gl□e□line t□i□□ness of 0.05 – 0□□8 mm is re□□mmended.

CLA **M**PING TE **M**PE **R**ATU **R**ES

Gl□e□line tem□erat□re determines t□e time t□at an □assem□l□t□ □e □□nded □it□ □□rmalde□□de □ased ad□esi□es s□□□ld □e □e□t □nder □ress□re t□ e□□e□t a □□m□lete □□re. T□e rate of □□emi□al rea□ti□n wh□ch ta□es

02□13 □□□□□ll data indi□ated are □□ara□teristi□s re□resented as a□erage □al□es. Ou□ te□□ni□al data s□eets are □□nstantl□ re□ised t□ re□resent t□e latest state of te□□n□l□g□. T□is editi□n is re□la□ing all □re□i□□s □nes, and is □alid □n t□e date □□□□m□lati□n□
□□□□□□□r□□□r□□□las □□age fo r□dd□□□□□□□□□r□ □□□□□.

Jowa □□nive rsa □Ad hes □ves Aus □ra□ia □r□□□□d□ · 2/2 □err Rd. □ngle□□rn NSW 2 □65 · □□stralia · P□□ne□+□1 □96 □53 □77 □Fax: +61 29 □ 0□□ 47□

□la□e □et□een □□□□□□□ R□ Resin and □□□□□□□ □ardener in□reases at □ig□er tem□erat□res□ □□n□ersel□□t□e rea□ti□n rate is sl□□er at l□□er tem□erat□res□T□e rate □□rea□ti□n □e□re t□e ad□esi□e is a□□lied □an □e s□me□ □at □□ntr□lled □□ □□□□ling t□e ad□esi□e mi□t□re t□ □□tain a l□nger □□t li□e□ □□ter t□e ad□esi□e □as □een a□□lied t□e □□re rate □an □e s□eeded □□ □□ □eating t□e gl□e□line and□□r t□e □lam□ed assem□l□□□ i□□ ma□ all□□ t□e □ress□re □eri□d t□ □e s□□rtened□T□is m□st □e m□nit□red □er□ □are□ll□ □□□□e□er□

T□e gl□e□line □an □e □eated in man□ □a□s□□□r e□am□le □re□□eating □□t□e tim□er t□ □□□□ □r a□□□e□□la□ing t□e assem□l□in a □eated □□am□er□□□t □ressing □r □sing resistan□e □eaters □la□ed ad□a□ent t□ t□e gl□e□line□ T□e rate □□tem□erat□re rise in t□e gl□e□line □ill □ar□ □it□ ea□□ t□□e □□□eat a□□li□ati□n□si□e □□assem□l□and □r□d□□ti□n □a□ilit□□□T□e □ress□re □eri□ds detailed in t□is d□□□ment ass□me t□at t□e entire gl□e□line is at t□e s□e□i□ied tem□erat□re□

□□□**M**□□□□ □□□**M**□□

T□is is t□e □eri□d □nder □□i□□ t□e □□int is □eld □nder □ress□re □it d□es n□t a□□l□ □□r □inger□□□inting□□□ T□e gl□e line □□re tem□erat□re g□□erns t□e rate □□resin □□re t□ere□□re □lam□ times and gl□e line strengt□ de□el□□ment□

R□ □M□□□M□□R□□□R□□□□□M□□□□

Minim□m □ress□re □eri□ds □□t□ree times t□e □□t li□e s□□□ld □e □sed□ □lt□□□g□ □□ll strengt□ □ill n□t de□el□□ d□ring t□is time it is generall□ade□□ate □□r all n□rmal □andling□

GL□□ LI□□ T□MP□R□T□R□ □□□□□	□□	□□	□□	□□
MI□IM□M □L□MP TIM□ □□□ □RS□	□□	□	□	□

□□□□□□**4**□□□lam□times □□□□□□□□R□ Resin □□□□□□□□ □ardener at relati□e gl□e□line tem□erat□re

It is □r□□ial t□at ea□□ entire gl□e□line is maintained at tem□erat□res □□at least □□□□□ t□r□□g□□□t t□e □lam□ing □eri□d□

□□□□□□**M**□□**R**□□□**R**□□□□□**M**□□□□

T□e □ll□□ing minim□m □ress times are needed t□ a□□ie□e a s□□i□ient strengt□ □□r t□e □int t□ □e m□□ed□

GL□□ LI□□ T□MP□R□T□R□ □□□□□	□□	□□	□□	
MI□IM□M □L□MP TIM□ □□□ □RS□	□□	□□	□	

□□□□□□□□□Press times □□□□□□□□R□ Resin □□□□□□□□R□ □ardener at relati□e gl□e□line tem□erat□re

T□is ad□esi□e s□stem □an □e □ressed □it□ gl□e□line tem□erat□res □□m □□ – □□□□□□ □l□t□e gl□e line tem□erat□re e□□eeds □□□□□ □□□e□er s□me □r□□lems ma□ □e en□□□ntered as t□e □ater lea□es t□e gl□e line as steam□T□is □a□ses t□e gl□e t□ □□□□□le □e□re it □□res red□□ing t□e gl□e line strengt□□

□□□□□□□□□□ll data indi□ated are □□ara□teristi□s re□resented as a□erage □al□es□□ □r te□□ni□al data s□eets are □□nstantl□ re□ised t□ re□resent t□e latest state □□te□□n□□g□□T□is editi□n is re□la□ing all □re□i□□s □nes□and is □alid □n t□e date □□□□m□ilati□n□
□□□□□□□r□□□r□□□□□□□□□□□□□□□□r□dd□□□□□□□□□□□r□ □□□□□□

□□□ □□□□ □□□□r□□□□□d□□□□□□□□□□□□□r□□□□□□r□□□□d□□□□□□ □err Rd□□Ingle□□rn □S□ □□□□□□□stralia □P□□ne□□□□ □□□ □□□ □□□ □□a□□□□□ □□□ □□□ □□□

R D R

n adstment t t standard R Resin ardener gle mi ma e re ired r re radi re en energ s all t is is a sim le matter adding salt t in rease t e nd ti it T e inal nd rmed is in n a ineri r t t at rmed d ring Details a s ita le gle mi are aila le n re est

T e m ist re ntent d sed in radi re en red ints s d e are ll ntr lled et een r arallel R eating and el eating Bel ist re t e d ells tend t lla se and inger int tters an er eat e m ist re t e radi re en energ tends t ass t r g r a r ss t e tim er in re eren e t t e gle line T is leads t ar ing t e ele tri al energ and rning t e d

D

D ring lam ing t e gle ill gel e er ll strengt is n t tained ints need t e nditi ned r da s e re rter r essing T e nditi ning eri d ill need t e nger at tem erat res el r it treated tim er is eing sed treated tim er is eing gle ed es e iall t en t e ints s d e eated t – r – rs s t at ll re ma e a ie ed ints are ma ined t earl t ere is a m ig er r a ilit t at t e ill e r en r r d ail re t e inal nds ill res lt Ma im m nd strengt s are rea ed da s a ter gling at St dies t e ring ara teristi s R Resin ardener s t at t is s stem s d e red at tem erat res el Bel t is tem erat re ma im m strengt is ne er tained

ment s d e leaned it t ater ile t e ad esi e is still li id se a dil te a sti s l ti n ma aid lean sa et glasses gl es and an a r n are re ired ile andling a sti s da as it is ig l rr si e

T e se a gle release agent n ma iner ill el t st t e ild ad esi e n ma iner

Pr d t made sing R Resin ardener s d e r tinel tested t ens re t at t e nds r d ed meet t e re ired standards and are s ita le r t e end se t e r d t

R

R resin is man a t red r m res r in and rmalde de id nta t it s in as it an ntentiall a se dermatitis in allergi ers ns t ressing t is ad esi e ma release s me rmalde de emissi ns ns re t ere is s ient entilati n as e s re an a se irritati n t t e es and m s mem ranes

R ardener ntains Li id id nta t it s in as it an irritate ee in a tig tl l sed ntainer and d n t smell t e r d t as rmalde de a rs ill e resent i ma e irritating t t e m s mem ranes and res irat r tra t

de ate entilati n s d e r ided R er gl es and sa et g ggles s d e rn d ring mi ing gl ing and leaning t e gle as t r g l it ater i an gl e is s ilt nt s in

Material Sa et Data S eets r R Resin ardener s d e read e re sing t ese r d ts

Jowat®

R M R

For further information concerning handling transport and disposal please refer to the Safety Data Sheet.

Our information on this data sheet is based on test results from our laboratories as well as on experience gained in the field. For our customers it cannot be ascertained with all parameters for each specific application and is therefore not binding for us. The information given in this leaflet represents neither a performance guarantee nor a guarantee for properties nature conditions state or quality or liability may be derived from these indications nor from the recommendations made by our free technical advisory service.

Gluing technology

Gluing is one of the most efficient methods for bonding is constantly gaining importance and expanding into new areas. Application at the same time the number of substrates to be bonded is also growing at an unprecedented rate. New methods and equipment to process adhesives are developed.

The in-house R & D departments at the Jowat AG are responding with intensive efforts to keep pace with these constant changes. Highly qualified team of chemists and engineers are using the latest techniques and original test ideas to provide the utmost in advice to our customers and to make sure that the right adhesive solution meets their needs.

Our information is based on test results from our laboratories as well as on experience gained in the field by our customers. This advice cannot cover all eventualities for each specific application and as such is not binding for us. Please contact our technical service department in each case to find out what the actual technical state of development for the respective product is and request the latest data sheet. In case of doubt it is the responsibility of the processor to test the suitability in each individual case. This applies to the first use of a sample as well as to modifications during an ongoing production.

We are therefore requesting all our new customers to test our adhesives for suitability in original parts at conditions equal to normal processing conditions. The bond has then to be subjected to the actual stress limit. It should undergo tests in use and has to be assessed. This test is absolutely necessary.

Customers who undertake modifications during a running production are requested to pass this information on to us. Please notify us when machines are set to new parameters as well as when the substrates to be bonded are changed. Only then will we be able to provide our most up-to-date information to the processor using our adhesives.

The information given in this leaflet is based on practical experience and on results of tests in our laboratories and does in no case constitute any guarantee of properties or liability may be derived from these indications nor from the recommendations made by our technical advisory service.

Safety Data Sheet
according to P.U.(A) 310/2013

Printing date 09.03.2017 Version number 22 Revision: 09.03.2017

1 Identification of the hazardous chemical and of the supplier

· **Product identifier**
· **Trade name JOWAT 402.30**
· **Relevant identified uses of the substance or mixture and uses advised against**
No further relevant information available.
· **Application of the substance / the mixture**
Solvents
Cleaning agent/ Cleaner
Thinner, Diluent
· **Uses advised against** Restricted to professional users.

· **Details of the supplier of the safety data sheet**
· **Manufacturer/Supplier:**
Jowat SE
Ernst-Hilker-Str. 10 - 14; D - 32758 Detmold
Fon +49 (0)5231 749 0; Fax +49 (0)5231 749 236
e-mail: info@jowat.de
www.jowat.de
· **Department issuing data specification sheet:**
Environmental management
Ellen Lange / Tina Friedrich / Jan-Peter Boelcke
Fon +49 5231 749 218 / 270 / 211
e-mail: umweltmanagement@jowat.de
· **Department providing the information:**
HSE
Tel: +60 6 798 4000
Fax: +60 6 799 7125
e-mail: HSE@jowat.my
· **Emergency telephone number:**
+60(0)6 798 4045
available on weekdays: 9 am - 6 pm

* 2 Hazard identification

· **Classification of the substance or mixture**

health hazard

Repr. 1B H360 May damage fertility or the unborn child.

Skin Irrit. 2 H315 Causes skin irritation.
Eye Irrit. 2 H319 Causes serious eye irritation.
STOT SE 3 H335 May cause respiratory irritation.

· **Label elements**
· **GHS label elements**
The product is classified and labelled according to the Globally Harmonised System (GHS).
· **Hazard pictograms**

GHS07 GHS08

· **Signal word** Danger

· **Hazard-determining components of labelling:**
N-methyl-2-pyrrolidone

(Contd. on page 2)

Safety Data Sheet
according to P.U.(A) 310/2013

Printing date 09.03.2017 Version number 22 Revision: 09.03.2017

Trade name JOWAT 402.30

(Contd. from page 1)

· **Hazard statements**
H315 Causes skin irritation.
H319 Causes serious eye irritation.
H360 May damage fertility or the unborn child.
H335 May cause respiratory irritation.
· **Precautionary statements**

P280	Wear protective gloves / eye protection / face protection.
P261	Avoid breathing dust/fume/gas/mist/vapours/spray.
P305+P351+P338	IF IN EYES: Rinse cautiously with water for several minutes. Remove contact lenses, if present and easy to do. Continue rinsing.
P304+P340	IF INHALED: Remove victim to fresh air and keep at rest in a position comfortable for breathing.
P403+P233	Store in a well-ventilated place. Keep container tightly closed.
P501	Dispose of contents/container in accordance with local/regional/national/ international regulations.

· **Other hazards**
· **Results of PBT and vPvB assessment**
· **PBT:** Not applicable.
· **vPvB:** Not applicable.

* 3 Composition and information of the ingredients of the hazardous chemical

· **Chemical characterisation: Substances**
· **CAS No. Designation:**
2687-91-4 1-ethylpyrrolidin-2-one
· **Identification number(s):**
· **EC number:** 220-250-6
· **Chemical characterisation: Mixtures**
· **Description:** Solvent mixture.

· **Dangerous components:**		
872-50-4	N-methyl-2-pyrrolidone Repr. 1B, H360; Skin Irrit. 2, H315; Eye Irrit. 2, H319; STOT SE 3, H335	>50%

· **SVHC**		
872-50-4	N-methyl-2-pyrrolidone	99.9%

· **Additional information**
If any R-phrases (risk-phrases) are listed, please refer for the exact wording to section 16.

4 First-aid measures

· **Description of first aid measures**
· **After inhalation**
In case of unconsciousness bring patient into stable side position for transport.
Supply fresh air; consult physician in case of symptoms.
· **After skin contact** Instantly wash with water and soap and rinse thoroughly.
· **After eye contact**
Rinse opened eye for several minutes under running water. If symptoms persist, consult physician.
· **After swallowing** In case of persistent symptoms consult physician.
· **Information for physician**
· **Most important symptoms and effects, both acute and delayed**
No further relevant information available.
· **Danger** Danger of pulmonary oedema.
· **Indication of any immediate medical attention and special treatment needed**
If swallowed or in case of vomiting, danger of entering the lungs

5 Fire-fighting measures

· **Extinguishing media**
· **Suitable extinguishing agents**
CO2, extinguishing powder or water jet. Fight larger fires with water jet or alcohol-resistant foam.

(Contd. on page 3)

Safety Data Sheet
according to P.U.(A) 310/2013

Printing date 09.03.2017 Version number 22 Revision: 09.03.2017

Trade name JOWAT 402.30

(Contd. from page 2)

· **Special hazards arising from the substance or mixture**
Formation of toxic gases is possible during heating or in case of fire.
Can be released in case of fire
Carbon monoxide (CO)
· **Advice for firefighters**
· **Protective equipment:**
Wear self-contained breathing apparatus.
Do not inhale explosion gases or combustion gases.

6 Accidental release measures

· **Personal precautions, protective equipment and emergency procedures** Wear protective clothing.
· **Environmental precautions:**
Do not allow product to reach sewage system or water bodies.
Prevent from spreading (e.g. by damming-in or oil barriers).
· **Methods and material for containment and cleaning up:**
Absorb with liquid-binding material (sand, diatomite, acid binders, universal binders, sawdust).
Dispose of contaminated material as waste according to item 13.
Ensure adequate ventilation.
· **Reference to other sections**
See Section 7 for information on safe handling
See Section 8 for information on personal protection equipment.
See Section 13 for information on disposal.

7 Handling and storage

· **Handling**
· **Precautions for safe handling**
Store in cool, dry place in tightly closed containers.
Open and handle container with care.
Ensure good interior ventilation, especially at floor level. (Fumes are heavier than air).
· **Information about protection against explosions and fires:**
Keep ignition sources away - Do not smoke.
Keep breathing equipment ready.
Use only in explosion-proof area.
Highly volatile, flammable constituents are released during processing.
Fumes can combine with air to form an explosive mixture.
Danger of explosion if fluid enters the drainage system
Flammable mixtures may be formed in empty containers.

· **Conditions for safe storage, including any incompatibilities**
· **Storage**
· **Requirements to be met by storerooms and containers:** No special requirements.
· **Information about storage in one common storage facility:** Not required.
· **Further information about storage conditions:** Keep container tightly sealed.
· **Storage class** 6.1 C
· **Specific end use(s)** No further relevant information available.

8 Exposure controls and personal protection

· **Additional information about design of technical systems:** No further data; see item 7.

· **Control parameters**
· **Components with critical values that require monitoring in the workplace:**
The product does not contain any relevant quantities of materials with critical values that have to be monitored at the workplace.
· **Additional information:** The lists that were valid during the compilation were used as basis.

· **Exposure controls**
· **Additional information about design of technical systems:** No further data; see item 7.

(Contd. on page 4)

Safety Data Sheet
according to P.U.(A) 310/2013

Printing date 09.03.2017 Version number 22 Revision: 09.03.2017

Trade name JOWAT 402.30

(Contd. from page 3)

· **Personal protective equipment**
· **General protective and hygienic measures**
Standard precautionary measures for handling chemicals are to be observed.
Keep away from food, beverages and animal feed.
Instantly remove any soiled and impregnated garments.
Wash hands during breaks and at the end of work.
Store protective clothing separately.
Avoid contact with the eyes and skin.
Do not eat or drink while working.
· **Breathing equipment:**
Use breathing protection in case of insufficient ventilation (EN 14387).
Short term filter device:
Filter AX (boining point < 61 °C); Filter A (boiling point > 60 °C).
· **Protection of hands:** Impervious gloves (EN 374).
· **Material of gloves** Butyl rubber, BR
· **Penetration time of glove material**
The exact time limit until penetration has to be found out from the manufacturer of the protective gloves; please ensure that this value is not exceeded.
· **Gloves made of the following material are suitable for the permanent contact with this material in work areas which do not have an above-average risk of injury (e.g. laboratories):**
LLDPE gloves
· **For the permanent contact gloves made of the following materials are suitable:** LLDPE gloves
· **For permanent contact of max. 15 minutes, gloves made of the following materials are suitable:**
Butyl rubber, BR
· **To protect against splashing, gloves made of the following materials are suitable:**
Chloroprene rubber, CR
· **Not suitable are gloves made of the following materials:**
Natural rubber, NR
Leather gloves
Strong gloves
· **Eye protection:** Tightly sealed safety glasses (EN 166).

9 Physical and chemical properties

· **Information on basic physical and chemical properties**	
· **General Information**	
· **Appearance:**	
· **Form:**	Fluid
· **Colour:**	According to product specification
· **Smell:**	Amine-like
· **Odour threshold:**	Not determined.
· **pH-value:**	Not determined.
· **Change in condition**	
· **Melting point/freezing point:**	-24 °C
· **Initial boiling point and boiling range:**	202 °C
· **Flash point:**	93 °C
· **Inflammability (solid, gaseous)**	Not applicable.
· **Ignition temperature:**	245 °C
· **Decomposition temperature:**	Not determined.
· **Spontaneous combustion:**	Product does not undergo spontaneous combustion.
· **Explosive properties:**	Product is not explosive.
· **Critical values for explosion:**	
· **Lower:**	1.3 Vol %

(Contd. on page 5)

Safety Data Sheet
according to P.U.(A) 310/2013

Printing date 09.03.2017 Version number 22 Revision: 09.03.2017

Trade name JOWAT 402.30

(Contd. from page 4)

· **Upper:**	9.5 Vol %
· **Vapour pressure at 20 °C:**	0.32 hPa
· **Density at 20 °C**	1.03 g/cm³
· **Relative density**	Not determined.
· **Vapour density**	Not determined.
· **Evaporation rate**	Not determined.
· **Solubility in / Miscibility with**	
· **Water:**	Not determined.
· **distribution ratio (n-octanol/water):**	Not determined.
· **Viscosity:**	
· **dynamic:**	Not determined.
· **kinematic:**	Not determined.
· **Solvent content:**	
· **Organic solvents:**	99.9 %
· **Other information**	No further relevant information available.
· **VOC - Volatile Organic Compounds**	
· **European Union**	99.94 %
· **Switzerland**	99.91 %
· **U.S.A (less water and less exempts)**	1025.3 g/l / 8.56 lb/gl

10 Stability and reactivity

· **Reactivity** No further relevant information available.
· **Chemical stability**
· **Thermal decomposition / conditions to be avoided:**
No decomposition if used according to specifications.
· **Possibility of hazardous reactions**
Forms explosive gas mixture with air
Develops readily flammable gases / fumes
Reacts with strong acids and alkali
Used empty containers may contain product gases which form explosive mixtures with air
Forms explosive gas mixture with air
Can form explosive mixtures in air if heated above flash point and/or when sprayed or atomised
· **Conditions to avoid** No further relevant information available.
· **Incompatible materials:** No further relevant information available.
· **Hazardous decomposition products:**
Hydrocarbons
Inflammable gases/vapours
Carbon monoxide and carbon dioxide

11 Toxicological information

· **Information on toxicological effects**

· **Acute toxicity**

· **LD/LC50 values that are relevant for classification:**		
Oral	LD50 oral	3600 mg/kg (rat)
Dermal	LD50 dermal	8000 mg/kg (rabbit)

872-50-4 N-methyl-2-pyrrolidone		
Oral	LD50 oral	4150 mg/kg (rat)
Dermal	LD50 dermal	5500 mg/kg (rabbit)

· **Primary irritant effect:**
· **to the skin:** Irritant for skin and mucous membranes.
· **to the eye:** Irritant effect.

(Contd. on page 6)

Safety Data Sheet
according to P.U.(A) 310/2013

Printing date 09.03.2017 Version number 22 Revision: 09.03.2017

Trade name JOWAT 402.30

(Contd. from page 5)

· **Respiratory or skin sensitisation** No sensitizing effect known.
· **Additional toxicological information:**
The product shows the following dangers according to the calculation method of the General EC Classification Guidelines for Preparations (Directive 1999/45/EC of the European Parliament and of the Council) as issued in the latest version:
The product can cause deformations.
Irritant
· **CMR effects (carcinogenity, mutagenicity and toxicity for reproduction)**
Repr. 1B

12 Ecological information

· **Toxicity**

· **Aquatic toxicity:**	
LC50	3048 mg/l (salmo gairdneri)

872-50-4 N-methyl-2-pyrrolidone	
LC50 / 96 h	832 mg/l (bluegill sunfish)
	4000 mg/l (orfe (ide))
	> 500 mg/l (salmo gairdneri)
LC50 / 48 h	> 9000 mg/l (activated sludge)
EC50 / 48 h	4897 mg/l (water flea)
EC50 / 24 h (static)	> 1000 mg/l (water flea)
EC50 / 0,5 h	> 500 mg/l (activated sludge)
EC50 / 72 h	> 500 mg/l (green algae)
	> 500 mg/l (scenedesmus subspicatus)
NOEC	5000 mg/l (green algae)
	5000 mg/l (activated sludge)

· **Persistence and degradability** No further relevant information available.
· **Behaviour in environmental systems:**
· **Bioaccumulative potential** No further relevant information available.
· **Mobility in soil** No further relevant information available.
· **Additional ecological information:**

· **CSB-value:**	
872-50-4 N-methyl-2-pyrrolidone	
CSB	1600 mg/g (n.a.)

· **BSB5-value:**	
872-50-4 N-methyl-2-pyrrolidone	
BSB	1100 mg/g (n.a.)

· **General notes:**
Water hazard class 1 (Self-assessment): slightly hazardous for water.
Do not allow the product to reach ground water, open water or the sewer system, undiluted or in large quantites.
· **Results of PBT and vPvB assessment**
· **PBT:** Not applicable.
· **vPvB:** Not applicable.
· **Other adverse effects** No further relevant information available.

13 Disposal information

· **Waste treatment methods**
· **Recommendation**
Must not be disposed of together with household garbage. Do not allow product to reach sewage system.
Hand over to disposers of hazardous waste.

(Contd. on page 7)

Safety Data Sheet
according to P.U.(A) 310/2013

Printing date 09.03.2017 Version number 22 Revision: 09.03.2017

Trade name JOWAT 402.30

(Contd. from page 6)

· **Uncleaned containers/packaging material:**
· **Recommendation:**
Dispose of packaging according to regulations on the disposal of packagings.
Empty contaminated packagings thoroughly. They can be recycled after thorough and proper cleaning.
Packagings that cannot be cleaned are to be disposed of in the same manner as the product.

14 Transportation information

· **UN-Number**	
· **ADR, ADN, IMDG, IATA**	not applicable
· **UN proper shipping name**	
· **ADR, ADN, IMDG, IATA**	not applicable
· **Transport hazard class(es)**	
· **ADR, ADN, IMDG, IATA**	
· **Class**	not applicable
· **Packing group**	
· **ADR, IMDG, IATA**	not applicable
· **Environmental hazards:**	
· **Marine pollutant:**	No
· **Special precautions for user**	Not applicable.
· **Transport in bulk according to Annex II of Marpol and the IBC Code**	Not applicable.
· **UN "Model Regulation":**	not applicable

* 15 Regulatory information

· **Chemical safety assessment:** A Chemical Safety Assessment has not been carried out.

* 16 Other information

These data are based on our present knowledge. They shall, however, not constitute a guarantee for any specific product features and shall not establish a legally valid contractual relationship.
All standard industrial precautions apply, concerning protection of health, and safe handling. The recommendations have to be examined in the context of the application for which the product is intended, and observed as necessary.

· **Relevant phrases**
H315 Causes skin irritation.
H319 Causes serious eye irritation.
H335 May cause respiratory irritation.
H360 May damage fertility or the unborn child.

· **Abbreviations and acronyms:**
RID: Règlement international concernant le transport des marchandises dangereuses par chemin de fer (Regulations Concerning the International Transport of Dangerous Goods by Rail)
ICAO: International Civil Aviation Organisation
ADR: Accord européen sur le transport des marchandises dangereuses par Route (European Agreement concerning the International Carriage of Dangerous Goods by Road)
IMDG: International Maritime Code for Dangerous Goods
IATA: International Air Transport Association
EINECS: European Inventory of Existing Commercial Chemical Substances
ELINCS: European List of Notified Chemical Substances
CAS: Chemical Abstracts Service (division of the American Chemical Society)
LC50: Lethal concentration, 50 percent
LD50: Lethal dose, 50 percent
PBT: Persistent, Bioaccumulative and Toxic
SVHC: Substances of Very High Concern
vPvB: very Persistent and very Bioaccumulative
Skin Irrit. 2: Skin corrosion/irritation – Category 2
Eye Irrit. 2: Serious eye damage/eye irritation – Category 2
Repr. 1B: Reproductive toxicity – Category 1B

(Contd. on page 8)

Safety Data Sheet
according to P.U.(A) 310/2013

(Contd. from page 7)

STOT SE 3: Specific target organ toxicity (single exposure) – Category 3

· *** Data modified in comparison to the previous version.**

Safety Data Sheet
according to WHS Regulations

Printing date 04.04.2023 Version number 34 Revision: 04.04.2023

Hazardous according to criteria of Australian Safety and Compensation Council.

*
1 Identification

· **Product identifier**
· **Trade name Jowapur 681.10**
· **Relevant identified uses of the substance or mixture and uses advised against**
No further relevant information available.
· **Application of the substance / the mixture** Adhesives
· **Uses advised against** Restricted to professional users.

· **Details of the supplier of the safety data sheet**
· **Manufacturer/Supplier:**
JOWAT Swiss AG
Chemische & Leimfabrik
CH - 6033 Buchrain
Tel.: +41 (0)41-445 1111
· **Department issuing data specification sheet:**
Environmental management
Tel. +49 5231 749 -218 / -211 / -5460 / -5374
e-mail: umweltmanagement@jowat.de
· **Information provided by department:**
Jowat Universal Adhesives Australia Pty., Ltd
2/12 Kerr Road, Ingleburn, NSW Australia 2565
PO Box 687 Ingleburn NSW Australia 1890
Phone: +61 2 9605 3477
info@jowatpacific.com
· **Emergency telephone number:** 131 126 (Poisons Information Centre)

2 Hazard(s) Identification

· **Classification of the substance or mixture**

health hazard

Resp. Sens. 1	H334 May cause allergy or asthma symptoms or breathing difficulties if inhaled.
Carc. 2	H351 Suspected of causing cancer.
STOT RE 2	H373 May cause damage to organs through prolonged or repeated exposure.

Skin Irrit. 2	H315 Causes skin irritation.
Serious eye damage/irritation – Category 2A	H319 Causes serious eye irritation.
Skin Sens. 1	H317 May cause an allergic skin reaction.
STOT SE 3	H335 May cause respiratory irritation.

· **Label elements**
· **GHS label elements**
The product is classified and labelled according to the Globally Harmonised System (GHS).
· **Hazard pictograms**

GHS07 GHS08

(Contd. on page 2)

Safety Data Sheet
according to WHS Regulations

Printing date 04.04.2023 Version number 34 Revision: 04.04.2023

Trade name Jowapur 681.10

(Contd. from page 1)

· **Signal word** Danger

· **Hazard-determining components of labelling:**
diphenylmethane diisocyanate
· **Hazard statements**
H315 Causes skin irritation.
H319 Causes serious eye irritation.
H334 May cause allergy or asthma symptoms or breathing difficulties if inhaled.
H317 May cause an allergic skin reaction.
H351 Suspected of causing cancer.
H335 May cause respiratory irritation.
H373 May cause damage to organs through prolonged or repeated exposure.
· **Precautionary statements**

P260	Do not breathe dust/fume/gas/mist/vapours/spray.
P280	Wear protective gloves/protective clothing/eye protection/face protection.
P305+P351+P338	IF IN EYES: Rinse cautiously with water for several minutes. Remove contact lenses, if present and easy to do. Continue rinsing.
P342+P311	If experiencing respiratory symptoms: Call a POISON CENTER/doctor.
P403+P233	Store in a well-ventilated place. Keep container tightly closed.
P501	Dispose of contents/container in accordance with local/regional/national/international regulations.

· **Other hazards**
· **Results of PBT and vPvB assessment**
· **PBT:** Not applicable.
· **vPvB:** Not applicable.

3 Composition and Information on Ingredients

· **Chemical characterisation: Mixtures**
· **Description:**
Adhesive.
Isocyanate resin

· **Dangerous components:**		
26447-40-5	diphenylmethane diisocyanate Resp. Sens. 1, H334; Carc. 2, H351; STOT RE 2, H373; Acute Tox. 4, H332; Skin Irrit. 2, H315; Eye Irrit. 2, H319; Skin Sens. 1, H317; STOT SE 3, H335	25-50%
103-83-3	benzyldimethylamine Flam. Liq. 3, H226; Acute Tox. 3, H331; Skin Corr. 1B, H314; Acute Tox. 4, H302; Acute Tox. 4, H312	<0.5%

· **SVHC** Not applicable.
· **Additional information**
If any R-phrases (risk-phrases) are listed, please refer for the exact wording to section 16.

4 First Aid Measures

· **General information** Instantly remove any clothing soiled by the product.
· **After inhalation**
Supply fresh air and contact physician for safety reasons.
In case of unconsciousness bring patient into stable side position for transport.
· **After skin contact** Instantly wash with water and soap and rinse thoroughly.
· **After eye contact**
Rinse opened eye for several minutes under running water. If symptoms persist, consult physician.
· **After swallowing** In case of persistent symptoms consult physician.
· **Information for physician**
· **Most important symptoms and effects, both acute and delayed** Asthma attacks
· **Indication of any immediate medical attention and special treatment needed**
No further relevant information available.

(Contd. on page 3)

Safety Data Sheet
according to WHS Regulations

Printing date 04.04.2023 Version number 34 Revision: 04.04.2023

Trade name Jowapur 681.10

(Contd. from page 2)

5 Fire Fighting Measures

· **Suitable extinguishing agents**
CO2, extinguishing powder or water jet. Fight larger fires with water jet or alcohol-resistant foam.
· **Special hazards arising from the substance or mixture**
Formation of poisonous gases during heating or in fires.
Can be released in case of fire
Nitrogen oxides (NOx)
Carbon monoxide (CO)
Hydrogen cyanide (HCN)
· **Protective equipment:**
Wear self-contained breathing apparatus.
Put on breathing apparatus.
Do not inhale explosion gases or combustion gases.

6 Accidental Release Measures

· **Personal precautions, protective equipment and emergency procedures** Wear protective clothing.
· **Environmental precautions:**
Do not allow product to reach sewage system or water bodies.
Prevent from spreading (e.g. by damming-in or oil barriers).
· **Methods and material for containment and cleaning up:**
Absorb with liquid-binding material (sand, diatomite, acid binders, universal binders, sawdust).
Dispose of contaminated material as waste according to item 13.
Ensure adequate ventilation.
· **Reference to other sections**
See Section 7 for information on safe handling
See Section 8 for information on personal protection equipment.
See Section 13 for information on disposal.

* 7 Handling and Storage

· **Handling**
· **Precautions for safe handling**
Store in cool, dry place in tightly closed containers.
Prevent formation of aerosols.
Use only in well ventilated areas.
· **Information about protection against explosions and fires:** Keep breathing equipment ready.
· **Storage**
· **Requirements to be met by storerooms and containers:** No special requirements.
· **Information about storage in one common storage facility:** Not required.
· **Further information about storage conditions:**
Keep container tightly sealed.
Store under dry conditions.
Protect from humidity and keep away from water.
· **Specific end use(s)** No further relevant information available.

8 Exposure controls and personal protection

· **Additional information about design of technical systems:** No further data; see item 7.

· **Components with critical values that require monitoring in the workplace:**	
26447-40-5 diphenylmethane diisocyanate	
WES	Short-term value: 0.07 mg/m³ Long-term value: 0.02 mg/m³ Sen, as -NCO

· **Additional information:** The lists that were valid during the compilation were used as basis.
· **Additional information about design of technical systems:** No further data; see item 7.

(Contd. on page 4)

Safety Data Sheet
according to WHS Regulations

Printing date 04.04.2023 Version number 34 Revision: 04.04.2023

Trade name Jowapur 681.10

(Contd. from page 3)

· **Personal protective equipment**
· **General protective and hygienic measures**
To ensure proper protection for any given situation, seek guidance from the following sources:
AS 2919: Protective clothing
AS 2161: Gloves
AS 1337: Eye protection
AS 1715: Respiratory protection
Standard precautionary measures for handling chemicals are to be observed.
Keep away from food, beverages and animal feed.
Instantly remove any soiled and impregnated garments.
Wash hands during breaks and at the end of work.
Store protective clothing separately.
Do not inhale gases / fumes / aerosols.
Avoid contact with the eyes and skin.
Do not eat or drink while working.
· **Breathing equipment:**
Use breathing protection in case of insufficient ventilation (EN 14387).
Short term filter device:
Filter A/B/P2.
In case of brief exposure or low pollution use breathing filter apparatus (EN 136). In case of intensive or longer exposure use breathing apparatus that is independent of circulating air (EN 137).
· **Protection of hands:** Impervious gloves (EN 374).
· **Material of gloves**
Butyl rubber, BR
Nitrile rubber, NBR
· **Penetration time of glove material**
The exact time limit until penetration has to be found out from the manufacturer of the protective gloves; please ensure that this value is not exceeded.
· **Gloves made of the following material are suitable for the permanent contact with this material in work areas which do not have an above-average risk of injury (e.g. laboratories):**
PVC gloves
Butyl rubber, BR
Fluorocarbon rubber (Viton)
· **For the permanent contact gloves made of the following materials are suitable:**
Butyl rubber, BR
Fluorocarbon rubber (Viton)
· **For permanent contact of max. 15 minutes, gloves made of the following materials are suitable:**
Nitrile rubber, NBR
· **Not suitable are gloves made of the following materials:**
Leather gloves
Strong gloves
· **Eye protection:**
Safety glasses recommended during refilling and spraying.
Safety glasses

9 Physical and Chemical Properties

· **General Information**	
· **Appearance:**	
· **Form:**	Fluid
· **Colour:**	Brown
· **Smell:**	Acidic
· **Odour threshold:**	Not determined.
· **pH-value at 20 °C:**	7
· **Change in condition**	
· **Melting point/freezing point:**	Not determined
· **Initial boiling point and boiling range:**	291 °C
· **Flash point:**	198 °C

(Contd. on page 5)

Safety Data Sheet
according to WHS Regulations

Printing date 04.04.2023 Version number 34 Revision: 04.04.2023

Trade name Jowapur 681.10

(Contd. from page 4)

· **Inflammability (solid, gaseous)**	Not applicable.
· **Ignition temperature:**	485 °C
· **Decomposition temperature:**	Not determined.
· **Spontaneous combustion:**	Product does not undergo spontaneous combustion.
· **Explosive properties:**	Product is not explosive.
· **Critical values for explosion:**	
· **Lower:**	Not determined.
· **Upper:**	Not determined.
· **Vapour pressure:**	Not determined.
· **Density at 20 °C**	1.15 g/cm³
· **Relative density**	Not determined.
· **Vapour density**	Not determined.
· **Evaporation rate**	Not determined.
· **Solubility in / Miscibility with**	
· **Water:**	Not miscible or difficult to mix
· **distribution ratio (n-octanol/water):**	Not determined.
· **Viscosity:**	
· **dynamic at 20 °C:**	15,500 mPas
· **kinematic:**	Not determined.
· **Solvent content:**	
· **Organic solvents:**	0.2 %
· **Solid content:**	99.0 %

· **Other information**	
· **VOC - Volatile Organic Compounds**	
· **European Union**	0.20 %
· **Switzerland**	0.18 %
· **U.S.A (less water and less exempts)**	2.3 g/l / 0.02 lb/gal

10 Stability and Reactivity

· **Reactivity** No further relevant information available.
· **Thermal decomposition / conditions to be avoided:**
No decomposition if used according to specifications.
· **Possibility of hazardous reactions**
Reacts with water
Reacts with moist air
Reacts with strong acids and alkali
Can form explosive mixtures in air if heated above flash point and/or when sprayed or atomised
· **Conditions to avoid** No further relevant information available.
· **Incompatible materials:** No further relevant information available.
· **Hazardous decomposition products:**
Nitrous vitriol gases
Hydrogen cyanide (prussic acid)
Isocyanate
Inflammable gases/vapours
Carbon monoxide and carbon dioxide
Nitrogen oxides (NOx)

* 11 Toxicological Information

· **Information on toxicological effects**

· **Acute toxicity** Based on available data, the classification criteria are not met.

· **LD/LC50 values that are relevant for classification:**		
26447-40-5 diphenylmethane diisocyanate		
Oral	LD50 oral	10,000 mg/kg (rat)
Dermal	LD50 dermal	10,000 mg/kg (rabbit)

(Contd. on page 6)

Safety Data Sheet
according to WHS Regulations

Printing date 04.04.2023 Version number 34 Revision: 04.04.2023

Trade name Jowapur 681.10

(Contd. from page 5)

103-83-3 benzyldimethylamine		
Oral	LD50 oral	579 mg/kg (rat)
Dermal	LD50 dermal	1,477 mg/kg (rabbit)
Inhalative	LC50 / 4 h	2.05 mg/l (rat)

· **to the skin:** Causes skin irritation.
· **to the eye:** Causes serious eye irritation.
· **Respiratory or skin sensitisation**
May cause allergy or asthma symptoms or breathing difficulties if inhaled.
May cause an allergic skin reaction.
· **Germ cell mutagenicity** Based on available data, the classification criteria are not met.
· **Carcinogenicity** Suspected of causing cancer.
· **Reproductive toxicity** Based on available data, the classification criteria are not met.
· **STOT-single exposure** May cause respiratory irritation.
· **STOT-repeated exposure** May cause damage to organs through prolonged or repeated exposure.
· **Aspiration hazard** Based on available data, the classification criteria are not met.

12 Ecological Information

· **Toxicity**

· **Aquatic toxicity:**	
26447-40-5 diphenylmethane diisocyanate	
LC0	>1,000 mg/l (zebrafish)
EC50 / 24 h	>1,000 mg/l (water flea)
EC50 / 3 h	>100 mg/l (pseudomonas putida)
103-83-3 benzyldimethylamine	
LC50 / 96 h	37.8 mg/l (fathead minnow)
LC0	20 mg/l (orfe (ide))
EC50 / 48 h	110 mg/l (water flea)
EC50 / 16 h	749.6 mg/l (activated sludge)
EC50 / 72 h	1.34 mg/l (green algae)
NOEC	150 mg/l (rat)
LOEC	54 mg/l (pseudomonas putida)

· **Persistence and degradability** No further relevant information available.
· **Behaviour in environmental systems:**
· **Bioaccumulative potential** No further relevant information available.
· **Mobility in soil** No further relevant information available.
· **Ecotoxical effects:**

· **Behaviour in sewage plants:**	
103-83-3 benzyldimethylamine	
EC10 / 16 h	534 mg/l (activated sludge)

· **Additional ecological information:**
· **General notes:**
Water hazard class 1 (Self-assessment): slightly hazardous for water.
Do not allow the product to reach ground water, open water or the sewer system, undiluted or in large quantites.
· **Results of PBT and vPvB assessment**
· **PBT:** Not applicable.
· **vPvB:** Not applicable.
· **Other adverse effects** No further relevant information available.

(Contd. on page 7)

Safety Data Sheet
according to WHS Regulations

Printing date 04.04.2023 Version number 34 Revision: 04.04.2023

Trade name Jowapur 681.10

(Contd. from page 6)

13 Disposal considerations

· **Waste treatment methods**
· **Recommendation**
Must not be disposed of together with household garbage. Do not allow product to reach sewage system.
Hand over to disposers of hazardous waste.

· **Uncleaned containers/packaging material:**
· **Recommendation:**
Packagings that cannot be cleaned are to be disposed of in the same manner as the product.
Empty contaminated packagings thoroughly. They can be recycled after thorough and proper cleaning.
Packaging with cured adhesive residues can be recycled.
Packaging with cured adhesive residues can be treated as household waste.
Packaging with uncured adhesive residues must be disposed of as hazardous waste.

14 Transport information

· **UN-Number**	
· **ADG, ADN, IMDG, IATA**	not applicable
· **UN proper shipping name**	
· **ADG**	not applicable not applicable
· **ADN, IMDG, IATA**	not applicable
· **Transport hazard class(es)**	
· **ADG, ADN, IMDG, IATA**	
· **Class**	not applicable
· **Packing group**	
· **ADG, IMDG, IATA**	not applicable
· **Environmental hazards:**	
· **Marine pollutant:**	No
· **Special precautions for user**	Not applicable.
· **Transport in bulk according to Annex II of Marpol and the IBC Code**	Not applicable.
· **UN "Model Regulation":**	not applicable
· **Transport of dangerous goods: National Regulations**	Not a Dangerous Good according to the Australian Dangerous Goods Code (ADG 7) for transport by Road and Rail.

15 Regulatory information

· **Safety, health and environmental regulations/legislation specific for the substance or mixture**

· **Australian Inventory of Chemical Substances (AICS): (Substances not listed)**	
	Reaction mass of diphenylmethane diisocyanate and polyols
64741-88-4	Distillates (petroleum), solvent-refined heavy paraffinic
	Aliphatisches Homopolymer
6425-39-4	2,2'-dimorpholinyldiethyl ether
4083-64-1	p-toluenesulphonyl isocyanate
64742-95-6	Solvent naphtha (petroleum), light arom.

· **Standard for the Uniform Scheduling of Medicines and Poisons**
None of the ingredients is listed.

(Contd. on page 8)

Safety Data Sheet
according to WHS Regulations

Printing date 04.04.2023 Version number 34 Revision: 04.04.2023

Trade name Jowapur 681.10

(Contd. from page 7)

· **Australia: Priority Existing Chemicals**
None of the ingredients is listed.

· **National regulations**
· **Other regulations, limitations and prohibitive regulations**
Guidance note: Controlling isocyanate hazards at work 2008 (Government of Western Australia, Department of Commerce)
Occupational Safety and Health regulations 1996 (especially part 5) (Update 01/2013)
AS / NZS 1715:2012 Selection, use and maintenance of respiratory protective equipment
AS / NZS 1337:1992 Eye protectors for industrial applications
AS/ NZS 1716:2012 Respiratory protective devices
AS / NZS 2161.2:2005 Occupational protective gloves-General Requirements
AS / NZS 2162.10.3:2005 Occupational protective gloves-Protective gloves against chemicals and micro-organisms-Determination of resistance against permeation by chemicals
AS / NZS 4501.1:2008 Occupational protective clothing- Guidelines on the selection, use, care and maintenance of protecting clothing
AS 3765-1990 Clothing for protection against hazardous chemicals
· **Chemical safety assessment:** A Chemical Safety Assessment has been carried out.

16 Other information

These data are based on our present knowledge. They shall, however, not constitute a guarantee for any specific product features and shall not establish a legally valid contractual relationship.
All standard industrial precautions apply, concerning protection of health, and safe handling. The recommendations have to be examined in the context of the application for which the product is intended, and observed as necessary.

· **Relevant phrases**
H226 Flammable liquid and vapour.
H302 Harmful if swallowed.
H312 Harmful in contact with skin.
H314 Causes severe skin burns and eye damage.
H315 Causes skin irritation.
H317 May cause an allergic skin reaction.
H319 Causes serious eye irritation.
H331 Toxic if inhaled.
H332 Harmful if inhaled.
H334 May cause allergy or asthma symptoms or breathing difficulties if inhaled.
H335 May cause respiratory irritation.
H351 Suspected of causing cancer.
H373 May cause damage to organs through prolonged or repeated exposure.
· **Abbreviations and acronyms:**
RID: Règlement international concernant le transport des marchandises dangereuses par chemin de fer (Regulations Concerning the International Transport of Dangerous Goods by Rail)
ICAO: International Civil Aviation Organisation
ADR: Accord relatif au transport international des marchandises dangereuses par route (European Agreement Concerning the International Carriage of Dangerous Goods by Road)
IMDG: International Maritime Code for Dangerous Goods
IATA: International Air Transport Association
EINECS: European Inventory of Existing Commercial Chemical Substances
ELINCS: European List of Notified Chemical Substances
CAS: Chemical Abstracts Service (division of the American Chemical Society)
LC50: Lethal concentration, 50 percent
LD50: Lethal dose, 50 percent
PBT: Persistent, Bioaccumulative and Toxic
SVHC: Substances of Very High Concern
vPvB: very Persistent and very Bioaccumulative
Flam. Liq. 3: Flammable liquids – Category 3
Acute Tox. 3: Acute toxicity – Category 3
Acute Tox. 4: Acute toxicity – Category 4
Skin Corr. 1B: Skin corrosion/irritation – Category 1B
Skin Irrit. 2: Skin corrosion/irritation – Category 2
Eye Irrit. 2: Serious eye damage/eye irritation – Category 2
Serious eye damage/irritation – Category 2A: Serious eye damage/eye irritation – Category 2A
Resp. Sens. 1: Respiratory sensitisation – Category 1
Skin Sens. 1: Skin sensitisation – Category 1

(Contd. on page 9)

Safety Data Sheet
according to WHS Regulations

Printing date 04.04.2023 Version number 34 Revision: 04.04.2023

Trade name Jowapur 681.10

(Contd. from page 8)

Carc. 2: Carcinogenicity – Category 2
STOT SE 3: Specific target organ toxicity (single exposure) – Category 3
STOT RE 2: Specific target organ toxicity (repeated exposure) – Category 2

· *** Data modified in comparison to the previous version.**

Safety Data Sheet
according to WHS Regulations

Printing date 23.05.2023 Version number 37 Revision: 23.05.2023

Hazardous according to criteria of Australian Safety and Compensation Council.

* 1 Identification

· **Product identifier**
· **Trade name Jowat 901.10**
· **Relevant identified uses of the substance or mixture and uses advised against**
No further relevant information available.
· **Application of the substance / the mixture** Coating

· **Details of the supplier of the safety data sheet**
· **Manufacturer/Supplier:**
Jowat SE
Ernst-Hilker-Str. 10 - 14; D - 32758 Detmold
Fon +49 (0)5231 749 0
e-mail: info@jowat.de
www.jowat.de
· **Department issuing data specification sheet:**
Environmental management
Tel. +49 5231 749 -218 / -211 / -5460 / -5374
e-mail: umweltmanagement@jowat.de
· **Information provided by department:**
Jowat Universal Adhesives Australia Pty., Ltd
2/12 Kerr Road, Ingleburn, NSW Australia 2565
PO Box 687 Ingleburn NSW Australia 1890
Phone: +61 2 9605 3477
info@jowatpacific.com
· **Emergency telephone number:** 131 126 (Poisons Information Centre)

2 Hazard(s) Identification

· **Classification of the substance or mixture**

Serious eye damage/irritation – Category 2A H319 Causes serious eye irritation.

· **Label elements**
· **GHS label elements**
The product is classified and labelled according to the Globally Harmonised System (GHS).
· **Hazard pictograms**

GHS07

· **Signal word** Warning
· **Hazard statements**
H319 Causes serious eye irritation.
· **Precautionary statements**

P264	Wash thoroughly after handling.
P280	Wear eye protection / face protection.
P305+P351+P338	IF IN EYES: Rinse cautiously with water for several minutes. Remove contact lenses, if present and easy to do. Continue rinsing.
P337+P313	If eye irritation persists: Get medical advice/attention.

· **Other hazards**
· **Results of PBT and vPvB assessment**
· **PBT:** Not applicable.
· **vPvB:** Not applicable.

(Contd. on page 2)

Safety Data Sheet
according to WHS Regulations

Printing date 23.05.2023 Version number 37 Revision: 23.05.2023

Trade name Jowat 901.10

(Contd. from page 1)

3 Composition and Information on Ingredients

· **Chemical characterisation: Mixtures**
· **Description:** release agent

· **Dangerous components:**		
90640-32-7	Amines, C16-18 alkyl STOT RE 2, H373; Asp. Tox. 1, H304; Eye Dam. 1, H318; Skin Irrit. 2, H315	2.5-<5%

· **SVHC** Not applicable.
· **Additional information**
If any R-phrases (risk-phrases) are listed, please refer for the exact wording to section 16.
Contains < 3 % dimethyl sulfoxide (Note L)

4 First Aid Measures

· **After eye contact**
Rinse opened eye for several minutes under running water. If symptoms persist, consult physician.
· **After swallowing** In case of persistent symptoms consult physician.
· **Information for physician**
· **Most important symptoms and effects, both acute and delayed**
No further relevant information available.
· **Indication of any immediate medical attention and special treatment needed**
No further relevant information available.

5 Fire Fighting Measures

· **Suitable extinguishing agents**
CO2, extinguishing powder or water jet. Fight larger fires with water jet or alcohol-resistant foam.
· **Special hazards arising from the substance or mixture**
Can be released in case of fire
Carbon monoxide (CO)
· **Protective equipment:**
Wear self-contained breathing apparatus.
Do not inhale explosion gases or combustion gases.

6 Accidental Release Measures

· **Personal precautions, protective equipment and emergency procedures** Wear protective clothing.
· **Environmental precautions:**
Inform respective authorities in case product reaches water or sewage system.
· **Methods and material for containment and cleaning up:**
Dispose of contaminated material as waste according to item 13.
Collect mechanically.
· **Reference to other sections**
See Section 7 for information on safe handling
See Section 8 for information on personal protection equipment.
See Section 13 for information on disposal.
No dangerous materials are released.

* 7 Handling and Storage

· **Handling**
· **Precautions for safe handling** Store in cool, dry place in tightly closed containers.
· **Information about protection against explosions and fires:** No special measures required.
· **Storage**
· **Requirements to be met by storerooms and containers:** Prevent any penetration into the ground.
· **Information about storage in one common storage facility:** Not required.
· **Further information about storage conditions:** None.
· **Specific end use(s)** No further relevant information available.

(Contd. on page 3)

Safety Data Sheet
according to WHS Regulations

Printing date 23.05.2023 Version number 37 Revision: 23.05.2023

Trade name Jowat 901.10

(Contd. from page 2)

8 Exposure controls and personal protection

· **Additional information about design of technical systems:** No further data; see section 7.
· **Components with critical values that require monitoring in the workplace:**
· **Additional information:** The lists that were valid during the compilation were used as basis.
· **Additional information about design of technical systems:** No further data; see section 7.
· **Personal protective equipment**
· **General protective and hygienic measures**
To ensure proper protection for any given situation, seek guidance from the following sources:
AS 2919: Protective clothing
AS 2161: Gloves
AS 1337: Eye protection
AS 1715: Respiratory protection
Standard precautionary measures for handling chemicals are to be observed.
Keep away from food, beverages and animal feed.
Instantly remove any soiled and impregnated garments.
Wash hands during breaks and at the end of work.
Vacuum clean contaminated clothing. Do not blow or brush off contamination.
Avoid contact with the eyes and skin.
Do not eat or drink while working.
· **Breathing equipment:** Not required.
· **Protection of hands:**
Protective gloves.
Protective gloves and barrier cream.
· **Material of gloves**
The selection of the suitable gloves does not only depend on the material, but also on further marks of quality and varies from manufacturer to manufacturer. As the product is a preparation of several substances, the resistance of the glove material can not be calculated in advance and has therefore to be checked prior to the application.
· **Penetration time of glove material**
The exact time limit until penetration has to be found out from the manufacturer of the protective gloves; please ensure that this value is not exceeded.
· **Gloves made of the following material are suitable for the permanent contact with this material in work areas which do not have an above-average risk of injury (e.g. laboratories):**
Butyl rubber, BR
Fluorocarbon rubber (Viton)
· **For the permanent contact gloves made of the following materials are suitable:**
Butyl rubber, BR
Fluorocarbon rubber (Viton)
· **For permanent contact of max. 15 minutes, gloves made of the following materials are suitable:**
Nitrile rubber, NBR
· **Eye protection:** Safety glasses

9 Physical and Chemical Properties

· **General Information**	
· **Appearance:**	
· **Form:**	Pasty
· **Colour:**	Light yellow
· **Smell:**	Characteristic
· **Odour threshold:**	Not determined.
· **pH-value:**	Not applicable.
· **Change in condition**	
· **Melting point/freezing point:**	>30 °C
· **Initial boiling point and boiling range:**	>300 °C
· **Flash point:**	>100 °C
· **Inflammability (solid, gaseous)**	Product is not inflammable.
· **Decomposition temperature:**	Not determined.

(Contd. on page 4)

Safety Data Sheet
according to WHS Regulations

Printing date 23.05.2023 Version number 37 Revision: 23.05.2023

Trade name Jowat 901.10

(Contd. from page 3)

· **Spontaneous combustion:**	Product does not undergo spontaneous combustion.
· **Explosive properties:**	Product is not explosive.
· **Critical values for explosion:**	
· **Lower:**	0.5 Vol %
· **Upper:**	4.5 Vol %
· **Vapour pressure at 20 °C:**	<0.1 hPa
· **Density at 20 °C**	0.9 g/cm³
· **Relative density**	Not determined.
· **Vapour density**	Not applicable.
· **Evaporation rate**	Not applicable.
· **Solubility in / Miscibility with**	
· **Water:**	Unsoluble
· **distribution ratio (n-octanol/water):**	Not determined.
· **Viscosity:**	
· **dynamic:**	Not applicable.
· **kinematic at 20 °C:**	100 s (ISO 4 mm)
· **Solvent content:**	
· **Solid content:**	100.0 %

· **Other information**	
· **VOC - Volatile Organic Compounds**	
· **European Union**	0.00 %
· **Switzerland**	0.00 %
· **U.S.A (less water and less exempts)**	0.0 g/l / 0.00 lb/gal

10 Stability and Reactivity

· **Reactivity** No further relevant information available.
· **Thermal decomposition / conditions to be avoided:**
No decomposition if used according to specifications.
· **Conditions to avoid** No further relevant information available.
· **Incompatible materials:** No further relevant information available.
· **Hazardous decomposition products:** Carbon monoxide and carbon dioxide

* 11 Toxicological Information

· **Information on toxicological effects**

· **Acute toxicity** Based on available data, the classification criteria are not met.
· **LD/LC50 values that are relevant for classification:** void
· **to the skin:** Based on available data, the classification criteria are not met.
· **to the eye:** Causes serious eye irritation.
· **Respiratory or skin sensitisation** Based on available data, the classification criteria are not met.
· **Germ cell mutagenicity** Based on available data, the classification criteria are not met.
· **Carcinogenicity** Based on available data, the classification criteria are not met.
· **Reproductive toxicity** Based on available data, the classification criteria are not met.
· **STOT-single exposure** Based on available data, the classification criteria are not met.
· **STOT-repeated exposure** Based on available data, the classification criteria are not met.
· **Aspiration hazard** Based on available data, the classification criteria are not met.

12 Ecological Information

· **Toxicity**

· **Aquatic toxicity:**	
90640-32-7 Amines, C16-18 alkyl	
LC50 / 96 h	0.88 mg/l (zebrafish)
EC50 / 48 h	0.13 mg/l (water flea)
EC50 / 3 h	490 mg/l (activated sludge)

(Contd. on page 5)

Safety Data Sheet
according to WHS Regulations

Printing date 23.05.2023 Version number 37 Revision: 23.05.2023

Trade name Jowat 901.10

(Contd. from page 4)

EC50 / 72 h	0.12 mg/l (scenedesmus subspicatus)

· **Persistence and degradability** No further relevant information available.
· **Behaviour in environmental systems:**
· **Bioaccumulative potential** No further relevant information available.
· **Mobility in soil** No further relevant information available.
· **Additional ecological information:**
· **General notes:**
Water danger class 3 (Self-assessment): extremely hazardous for water.
Do not allow product to reach ground water, water bodies or sewage system, even in small quantities.
Danger to drinking water if even extremely small quantities leak into soil.
· **Results of PBT and vPvB assessment**
· **PBT:** Not applicable.
· **vPvB:** Not applicable.
· **Other adverse effects** No further relevant information available.

13 Disposal considerations

· **Waste treatment methods**
· **Recommendation** Hand over to disposers of hazardous waste.

· **Uncleaned containers/packaging material:**
· **Recommendation:**
Packaging with cured adhesive residues can be recycled.
Packaging with cured adhesive residues can be treated as household waste.
Packaging with uncured adhesive residues must be disposed of as hazardous waste.

14 Transport information

· **UN-Number**	
· **ADG, IMDG, IATA**	UN3077
· **UN proper shipping name**	
· **ADG**	3077 ENVIRONMENTALLY HAZARDOUS SUBSTANCE, SOLID, N.O.S. (Amines, C16-18 alkyl) 3077 UMWELTGEFÄHRDENDER STOFF, FEST, N.A.G. (Amine, C16-18 alkyl)
· **IMDG**	ENVIRONMENTALLY HAZARDOUS SUBSTANCE, SOLID, N.O.S. (Amines, C16-18 alkyl), MARINE POLLUTANT
· **IATA**	ENVIRONMENTALLY HAZARDOUS SUBSTANCE, SOLID, N.O.S. (Amines, C16-18 alkyl)
· **Transport hazard class(es)**	
· **ADG**	
· **Class**	9 (M7) Miscellaneous dangerous substances and articles.
· **Label**	9
· **IMDG, IATA**	
· **Class**	9 Miscellaneous dangerous substances and articles.

(Contd. on page 6)

Safety Data Sheet
according to WHS Regulations

Printing date 23.05.2023 Version number 37 Revision: 23.05.2023

Trade name Jowat 901.10

(Contd. from page 5)

· **Label**	9
· **Packing group**	
· **ADG, IMDG, IATA**	III
· **Environmental hazards:**	
· **Marine pollutant:**	Symbol (fish and tree)
· **Special marking (ADG):**	Symbol (fish and tree)
· **Special marking (IATA):**	Symbol (fish and tree)
· **Special precautions for user**	Warning: Miscellaneous dangerous substances and articles.
· **Kemler Number:**	90
· **EMS Number:**	F-A,S-F
· **Stowage Category**	A
· **Stowage Code**	SW23 When transported in BK3 bulk container, see 7.6.2.12 and 7.7.3.9.
· **Transport in bulk according to Annex II of Marpol and the IBC Code**	Not applicable.
· **Transport/Additional information:**	
· **ADG**	
· **Limited quantities (LQ)**	5 kg
· **Excepted quantities (EQ)**	Code: E1 Maximum net quantity per inner packaging: 30 g Maximum net quantity per outer packaging: 1000 g
· **Transport category**	3
· **Tunnel restriction code**	(-)
· **IMDG**	
· **Limited quantities (LQ)**	5 kg
· **Excepted quantities (EQ)**	Code: E1 Maximum net quantity per inner packaging: 30 g Maximum net quantity per outer packaging: 1000 g
· **UN "Model Regulation":**	UN 3077 ENVIRONMENTALLY HAZARDOUS SUBSTANCE, SOLID, N.O.S. (AMINES, C16-18 ALKYL), 9, III
· **Transport of dangerous goods: National Regulations**	Not a Dangerous Good according to the Australian Dangerous Goods Code (ADG 7) for transport by Road and Rail.

15 Regulatory information

· **Safety, health and environmental regulations/legislation specific for the substance or mixture**

· **Australian Inventory of Chemical Substances (AICS): (Substances not listed)**
None of the ingredients is listed.

· **Standard for the Uniform Scheduling of Medicines and Poisons**
None of the ingredients is listed.

· **Australia: Priority Existing Chemicals**
None of the ingredients is listed.

· **Chemical safety assessment**
· **Seveso category** E1 Hazardous to the Aquatic Environment
· **Qualifying quantity (tonnes) for the application of lower-tier requirements** 100 t
· **Qualifying quantity (tonnes) for the application of upper-tier requirements** 200 t

· **National regulations**
· **Other regulations, limitations and prohibitive regulations**
Occupational Safety and Health regulations 1996 (especially part 5) (Update 01/2013)

(Contd. on page 7)

Safety Data Sheet
according to WHS Regulations

Printing date 23.05.2023 Version number 37 Revision: 23.05.2023

Trade name Jowat 901.10

(Contd. from page 6)

AS / NZS 1337:1992 Eye protectors for industrial applications
AS / NZS 2161.2:2005 Occupational protective gloves-General Requirements
AS / NZS 2162.10.3:2005 Occupational protective gloves-Protective gloves against chemicals and micro-organisms-Determination of resistance against permeation by chemicals
AS / NZS 4501.1:2008 Occupational protective clothing- Guidelines on the selection, use, care and maintenance of protecting clothing
AS 3765-1990 Clothing for protection against hazardous chemicals

· **Chemical safety assessment:** A Chemical Safety Assessment has not been carried out.

16 Other information

These data are based on our present knowledge. They shall, however, not constitute a guarantee for any specific product features and shall not establish a legally valid contractual relationship.
All standard industrial precautions apply, concerning protection of health, and safe handling. The recommendations have to be examined in the context of the application for which the product is intended, and observed as necessary.

· **Relevant phrases**
H304 May be fatal if swallowed and enters airways.
H315 Causes skin irritation.
H318 Causes serious eye damage.
H373 May cause damage to organs through prolonged or repeated exposure.

· **Abbreviations and acronyms:**
RID: Règlement international concernant le transport des marchandises dangereuses par chemin de fer (Regulations Concerning the International Transport of Dangerous Goods by Rail)
ICAO: International Civil Aviation Organisation
ADR: Accord relatif au transport international des marchandises dangereuses par route (European Agreement Concerning the International Carriage of Dangerous Goods by Road)
IMDG: International Maritime Code for Dangerous Goods
IATA: International Air Transport Association
EINECS: European Inventory of Existing Commercial Chemical Substances
ELINCS: European List of Notified Chemical Substances
CAS: Chemical Abstracts Service (division of the American Chemical Society)
LC50: Lethal concentration, 50 percent
LD50: Lethal dose, 50 percent
PBT: Persistent, Bioaccumulative and Toxic
SVHC: Substances of Very High Concern
vPvB: very Persistent and very Bioaccumulative
Skin Irrit. 2: Skin corrosion/irritation – Category 2
Eye Dam. 1: Serious eye damage/eye irritation – Category 1
Serious eye damage/irritation – Category 2A: Serious eye damage/eye irritation – Category 2A
STOT RE 2: Specific target organ toxicity (repeated exposure) – Category 2
Asp. Tox. 1: Aspiration hazard – Category 1

· *** Data modified in comparison to the previous version.**

Safety Data Sheet
according to WHS Regulations

Printing date 30.09.2022 Version number 39 Revision: 30.09.2022

Hazardous according to criteria of Australian Safety and Compensation Council.

1 Identification

· **Product identifier**
· **Trade name Jowat 901.20**
· **Relevant identified uses of the substance or mixture and uses advised against**
No further relevant information available.
· **Application of the substance / the mixture** Coating
· **Uses advised against** Restricted to professional users.

· **Details of the supplier of the safety data sheet**
· **Manufacturer/Supplier:**
Jowat SE
Ernst-Hilker-Str. 10 - 14; D - 32758 Detmold
Fon +49 (0)5231 749 0
e-mail: info@jowat.de
www.jowat.de
· **Department issuing data specification sheet:**
Environmental management
Tel. +49 5231 749 -218 / -211 / -5460 / -5374
e-mail: umweltmanagement@jowat.de
· **Department providing the information:**
Jowat Universal Adhesives Australia Pty., Ltd
2/12 Kerr Road, Ingleburn, NSW Australia 2565
PO Box 687 Ingleburn NSW Australia 1890
Phone: +61 2 9605 3477
info@jowatpacific.com
· **Emergency telephone number:**
InfraServ Hoechst - Gefahrenabwehrmeldezentrale
D - 65926 Frankfurt
Fon: +49 (0)69-305-6418
131 126 (Poisons Information Centre)

* 2 Hazard(s) Identification

· **Classification of the substance or mixture**

health hazard

Asp. Tox. 1 H304 May be fatal if swallowed and enters airways.

· **Label elements**
· **GHS label elements**
The product is classified and labelled according to the Globally Harmonised System (GHS).
· **Hazard pictograms**

GHS08

· **Signal word** Danger

· **Hazard-determining components of labelling:**
Alkanes, C9-C12-Iso-
Naphtha (petroleum), heavy alkylate
Alkanes, C11-15-iso-
· **Hazard statements**
H304 May be fatal if swallowed and enters airways.
· **Precautionary statements**
P301+P310 IF SWALLOWED: Immediately call a POISON CENTER/ doctor.

(Contd. on page 2)

Safety Data Sheet
according to WHS Regulations

Printing date 30.09.2022 Version number 39 Revision: 30.09.2022

Trade name Jowat 901.20

(Contd. from page 1)

P331 Do NOT induce vomiting.
P405 Store locked up.
P501 Dispose of contents/container in accordance with local/regional/national/international regulations.

· **Other hazards**
· **Results of PBT and vPvB assessment**
· **PBT:** Not applicable.
· **vPvB:** Not applicable.

* 3 Composition and Information on Ingredients

· **Chemical characterisation: Mixtures**
· **Description:** release agent

· **Dangerous components:**			
90622-57-4	Alkanes, C9-C12-Iso-	Asp. Tox. 1, H304; Flam. Liq. 4, H227	35-<50%
64741-65-7	Naphtha (petroleum), heavy alkylate	Flam. Liq. 3, H226; Asp. Tox. 1, H304	25-<35%
90622-58-5	Alkanes, C11-15-iso-	Asp. Tox. 1, H304; Flam. Liq. 4, H227	15-<20%
90622-58-5	Alkanes, C11-15-iso-	Asp. Tox. 1, H304; Flam. Liq. 4, H227	5-<10%

· **SVHC** Not applicable.
· **Additional information**
If any R-phrases (risk-phrases) are listed, please refer for the exact wording to section 16.

4 First Aid Measures

· **Description of first aid measures**
· **After eye contact** Rinse opened eye for several minutes under running water.
· **After swallowing** In case of persistent symptoms consult physician.
· **Information for physician**
· **Most important symptoms and effects, both acute and delayed**
No further relevant information available.
· **Indication of any immediate medical attention and special treatment needed**
No further relevant information available.

5 Fire Fighting Measures

· **Extinguishing media**
· **Suitable extinguishing agents**
CO2, extinguishing powder or water jet. Fight larger fires with water jet or alcohol-resistant foam.
· **Special hazards arising from the substance or mixture**
Can be released in case of fire
Carbon monoxide (CO)
· **Advice for firefighters**
· **Protective equipment:**
Wear self-contained breathing apparatus.
Do not inhale explosion gases or combustion gases.

6 Accidental Release Measures

· **Personal precautions, protective equipment and emergency procedures** Wear protective clothing.
· **Environmental precautions:**
Inform respective authorities in case product reaches water or sewage system.
· **Methods and material for containment and cleaning up:**
Dispose of contaminated material as waste according to item 13.
Collect mechanically.
· **Reference to other sections**
See Section 7 for information on safe handling
See Section 8 for information on personal protection equipment.
See Section 13 for information on disposal.

(Contd. on page 3)

Safety Data Sheet
according to WHS Regulations

Printing date 30.09.2022 Version number 39 Revision: 30.09.2022

Trade name Jowat 901.20

(Contd. from page 2)

7 Handling and Storage

· **Handling**
· **Precautions for safe handling** Store in cool, dry place in tightly closed containers.
· **Information about protection against explosions and fires:** No special measures required.

· **Conditions for safe storage, including any incompatibilities**
· **Storage**
· **Requirements to be met by storerooms and containers:** Prevent any penetration into the ground.
· **Information about storage in one common storage facility:** Not required.
· **Further information about storage conditions:** None.
· **Storage class** 11
· **Specific end use(s)** No further relevant information available.

8 Exposure controls and personal protection

· **Additional information about design of technical systems:** No further data; see item 7.

· **Control parameters**
· **Components with critical values that require monitoring in the workplace:**
The product does not contain any relevant quantities of materials with critical values that have to be monitored at the workplace.
· **Additional information:** The lists that were valid during the compilation were used as basis.

· **Exposure controls**
· **Additional information about design of technical systems:** No further data; see item 7.
· **Personal protective equipment**
· **General protective and hygienic measures**
To ensure proper protection for any given situation, seek guidance from the following sources:
AS 2919: Protective clothing
AS 2161: Gloves
AS 1337: Eye protection
AS 1715: Respiratory protection
Standard precautionary measures for handling chemicals are to be observed.
Keep away from food, beverages and animal feed.
Instantly remove any soiled and impregnated garments.
Wash hands during breaks and at the end of work.
Vacuum clean contaminated clothing. Do not blow or brush off contamination.
Do not eat or drink while working.
· **Breathing equipment:** Not required.
· **Protection of hands:** Protective gloves.
· **Material of gloves**
Fluorocarbon rubber (Viton)
Nitrile rubber, NBR
· **Penetration time of glove material**
The exact time limit until penetration has to be found out from the manufacturer of the protective gloves; please ensure that this value is not exceeded.
· **Gloves made of the following material are suitable for the permanent contact with this material in work areas which do not have an above-average risk of injury (e.g. laboratories):**
PVC gloves
Butyl rubber, BR
Fluorocarbon rubber (Viton)
· **For the permanent contact gloves made of the following materials are suitable:**
Butyl rubber, BR
Fluorocarbon rubber (Viton)
· **For permanent contact of max. 15 minutes, gloves made of the following materials are suitable:**
Nitrile rubber, NBR

(Contd. on page 4)

Safety Data Sheet
according to WHS Regulations

Printing date 30.09.2022 Version number 39 Revision: 30.09.2022

Trade name Jowat 901.20

(Contd. from page 3)

· **Eye protection:** Not required.

* 9 Physical and Chemical Properties

· **Information on basic physical and chemical properties**	
· **General Information**	
· **Appearance:**	
· **Form:**	Pasty
· **Colour:**	White
· **Smell:**	Characteristic
· **Odour threshold:**	Not determined.
· **pH-value:**	Not applicable.
· **Change in condition**	
· **Melting point/freezing point:**	<-50 °C
· **Initial boiling point and boiling range:**	>170 °C
· **Flash point:**	65 °C
· **Inflammability (solid, gaseous)**	Product is not inflammable.
· **Ignition temperature:**	230 °C
· **Decomposition temperature:**	Not determined.
· **Spontaneous combustion:**	Product does not undergo spontaneous combustion.
· **Explosive properties:**	Product is not explosive.
· **Critical values for explosion:**	
· **Lower:**	0.6 Vol %
· **Upper:**	7 Vol %
· **Vapour pressure at 20 °C:**	1 hPa
· **Density at 20 °C**	0.78 g/cm³
· **Relative density**	Not determined.
· **Vapour density**	Not applicable.
· **Evaporation rate**	Not applicable.
· **Solubility in / Miscibility with**	
· **Water at 20 °C:**	< 1 g/l
· **distribution ratio (n-octanol/water):**	Not determined.
· **Viscosity:**	
· **dynamic at 20 °C:**	>3,000 mPas
· **kinematic at 40 °C:**	2.6 mm²/s
· **Solvent content:**	
· **Organic solvents:**	43.1 %
· **Other information**	
· **VOC - Volatile Organic Compounds**	
· **European Union**	43.10 %
· **Switzerland**	43.10 %
· **U.S.A (less water and less exempts)**	336.2 g/l / 2.81 lb/gal

10 Stability and Reactivity

· **Reactivity** No further relevant information available.
· **Chemical stability**
· **Thermal decomposition / conditions to be avoided:**
No decomposition if used according to specifications.
· **Conditions to avoid** No further relevant information available.
· **Incompatible materials:** No further relevant information available.

(Contd. on page 5)

Safety Data Sheet
according to WHS Regulations

Printing date 30.09.2022 Version number 39 Revision: 30.09.2022

Trade name Jowat 901.20

(Contd. from page 4)

· **Hazardous decomposition products:** Carbon monoxide and carbon dioxide

* 11 Toxicological Information

· **Information on toxicological effects**

· **Acute toxicity**

· **LD/LC50 values that are relevant for classification:**		
90622-58-5 Alkanes, C11-15-iso-		
Oral	LD50 oral	5,500 mg/kg (rat)
Dermal	LD50 dermal	5,500 mg/kg (rabbit)

· **Primary irritant effect:**
· **to the skin:** No irritant effect.
· **to the eye:** No irritant effect.
· **Respiratory or skin sensitisation** No sensitizing effect known.
· **Additional toxicological information:**
The product shows the following dangers according to the calculation method of the General EC Classification Guidelines for Preparations (Directive 1999/45/EC of the European Parliament and of the Council) as issued in the latest version:
Harmful

* 12 Ecological Information

· **Toxicity**
· **Aquatic toxicity:** No further relevant information available.
· **Persistence and degradability** No further relevant information available.
· **Behaviour in environmental systems:**
· **Bioaccumulative potential** No further relevant information available.
· **Mobility in soil** No further relevant information available.
· **Additional ecological information:**
· **General notes:**
Water danger class 3 (Self-assessment): extremely hazardous for water.
Do not allow product to reach ground water, water bodies or sewage system, even in small quantities.
Danger to drinking water if even extremely small quantities leak into soil.
· **Results of PBT and vPvB assessment**
· **PBT:** Not applicable.
· **vPvB:** Not applicable.
· **Other adverse effects** No further relevant information available.

13 Disposal considerations

· **Waste treatment methods**
· **Recommendation** Hand over to disposers of hazardous waste.

· **Uncleaned containers/packaging material:**
· **Recommendation:**
Packagings that cannot be cleaned are to be disposed of in the same manner as the product.
Packaging with cured adhesive residues can be recycled.
Packaging with cured adhesive residues can be treated as household waste.
Packaging with uncured adhesive residues must be disposed of as hazardous waste.

* 14 Transport information

· **UN-Number**	
· **ADG, IMDG, IATA**	UN3082
· **UN proper shipping name**	
· **ADG**	3082 ENVIRONMENTALLY HAZARDOUS SUBSTANCE, LIQUID, N.O.S. (octadecylamine)

(Contd. on page 6)

Safety Data Sheet
according to WHS Regulations

Printing date 30.09.2022 Version number 39 Revision: 30.09.2022

Trade name Jowat 901.20

(Contd. from page 5)

· **IMDG**	ENVIRONMENTALLY HAZARDOUS SUBSTANCE, LIQUID, N.O.S. (octadecylamine), MARINE POLLUTANT
· **IATA**	ENVIRONMENTALLY HAZARDOUS SUBSTANCE, LIQUID, N.O.S. (octadecylamine)
· **Transport hazard class(es)**	
· **ADG**	
· **Class**	9 (M6) Miscellaneous dangerous substances and articles.
· **Label**	9
· **IMDG, IATA**	
· **Class**	9 Miscellaneous dangerous substances and articles.
· **Label**	9
· **Packing group**	
· **ADG, IMDG, IATA**	III
· **Environmental hazards:**	
· **Marine pollutant:**	Yes Symbol (fish and tree)
· **Special marking (ADG):**	Symbol (fish and tree)
· **Special marking (IATA):**	Symbol (fish and tree)
· **Special precautions for user**	Warning: Miscellaneous dangerous substances and articles.
· **Kemler Number:**	90
· **EMS Number:**	F-A,S-F
· **Stowage Category**	A
· **Transport in bulk according to Annex II of Marpol and the IBC Code**	Not applicable.
· **Transport/Additional information:**	
· **ADG**	
· **Limited quantities (LQ)**	5L
· **Excepted quantities (EQ)**	Code: E1 Maximum net quantity per inner packaging: 30 g Maximum net quantity per outer packaging: 1000 g
· **Transport category**	3
· **Tunnel restriction code**	(-)
· **IMDG**	
· **Limited quantities (LQ)**	5L
· **Excepted quantities (EQ)**	Code: E1 Maximum net quantity per inner packaging: 30 g Maximum net quantity per outer packaging: 1000 g
· **UN "Model Regulation":**	UN 3082 ENVIRONMENTALLY HAZARDOUS SUBSTANCE, LIQUID, N.O.S. (OCTADECYLAMINE), 9, III

(Contd. on page 7)

Safety Data Sheet
according to WHS Regulations

Printing date 30.09.2022 Version number 39 Revision: 30.09.2022

Trade name Jowat 901.20

(Contd. from page 6)

· **Transport of dangerous goods: National Regulations**	Dangerous Goods Class 9 according to the Australian Dangerous Goods Code (ADG 7) for transport by Road and Rail.

* 15 Regulatory information

· **Safety, health and environmental regulations/legislation specific for the substance or mixture**

· **Australian Inventory of Chemical Substances (AICS): (Substances not listed)**	
90622-57-4	Alkanes, C9-C12-Iso-
64741-65-7	Naphtha (petroleum), heavy alkylate
90622-58-5	Alkanes, C11-15-iso-
90622-58-5	Alkanes, C11-15-iso-

· **Standard for the Uniform Scheduling of Medicines and Poisons**
None of the ingredients is listed.

· **Australia: Priority Existing Chemicals**
None of the ingredients is listed.

· **Chemical safety assessment**
· **Seveso category** E2 Hazardous to the Aquatic Environment
· **Qualifying quantity (tonnes) for the application of lower-tier requirements** 200 t
· **Qualifying quantity (tonnes) for the application of upper-tier requirements** 500 t

· **National regulations**
· **Other regulations, limitations and prohibitive regulations**
Occupational Safety and Health regulations 1996 (especially part 5) (Update 01/2013)
AS / NZS 1337:1992 Eye protectors for industrial applications
AS / NZS 2161.2:2005 Occupational protective gloves-General Requirements
AS / NZS 2162.10.3:2005 Occupational protective gloves-Protective gloves against chemicals and micro-organisms-Determination of resistance against permeation by chemicals
AS / NZS 4501.1:2008 Occupational protective clothing- Guidelines on the selection, use, care and maintenance of protecting clothing
AS 3765-1990 Clothing for protection against hazardous chemicals

· **Chemical safety assessment:** A Chemical Safety Assessment has not been carried out.

16 Other information

These data are based on our present knowledge. They shall, however, not constitute a guarantee for any specific product features and shall not establish a legally valid contractual relationship.
All standard industrial precautions apply, concerning protection of health, and safe handling. The recommendations have to be examined in the context of the application for which the product is intended, and observed as necessary.

· **Relevant phrases**
H226 Flammable liquid and vapour.
H227 Combustible liquid.
H304 May be fatal if swallowed and enters airways.

· **Abbreviations and acronyms:**
RID: Règlement international concernant le transport des marchandises dangereuses par chemin de fer (Regulations Concerning the International Transport of Dangerous Goods by Rail)
ICAO: International Civil Aviation Organisation
ADR: Accord relatif au transport international des marchandises dangereuses par route (European Agreement Concerning the International Carriage of Dangerous Goods by Road)
IMDG: International Maritime Code for Dangerous Goods
IATA: International Air Transport Association
EINECS: European Inventory of Existing Commercial Chemical Substances
ELINCS: European List of Notified Chemical Substances
CAS: Chemical Abstracts Service (division of the American Chemical Society)
LC50: Lethal concentration, 50 percent
LD50: Lethal dose, 50 percent
PBT: Persistent, Bioaccumulative and Toxic
SVHC: Substances of Very High Concern

(Contd. on page 8)

Safety Data Sheet
according to WHS Regulations

(Contd. from page 7)

vPvB: very Persistent and very Bioaccumulative
Flam. Liq. 3: Flammable liquids – Category 3
Flam. Liq. 4: Flammable liquids – Category 4
Asp. Tox. 1: Aspiration hazard – Category 1

· *** Data modified in comparison to the previous version.**

Appendix D Complaint Log

range
environmental
consultants

www.rangeenviro.com.au

BRISBANE
Unit 1/7 Birubi Street
Coorparoo Qld 4151

TOOWOOMBA
Office A, 189 Hume St
Toowoomba QLD 4350

T 07 4588 6711
E admin@rangeenviro.com.au

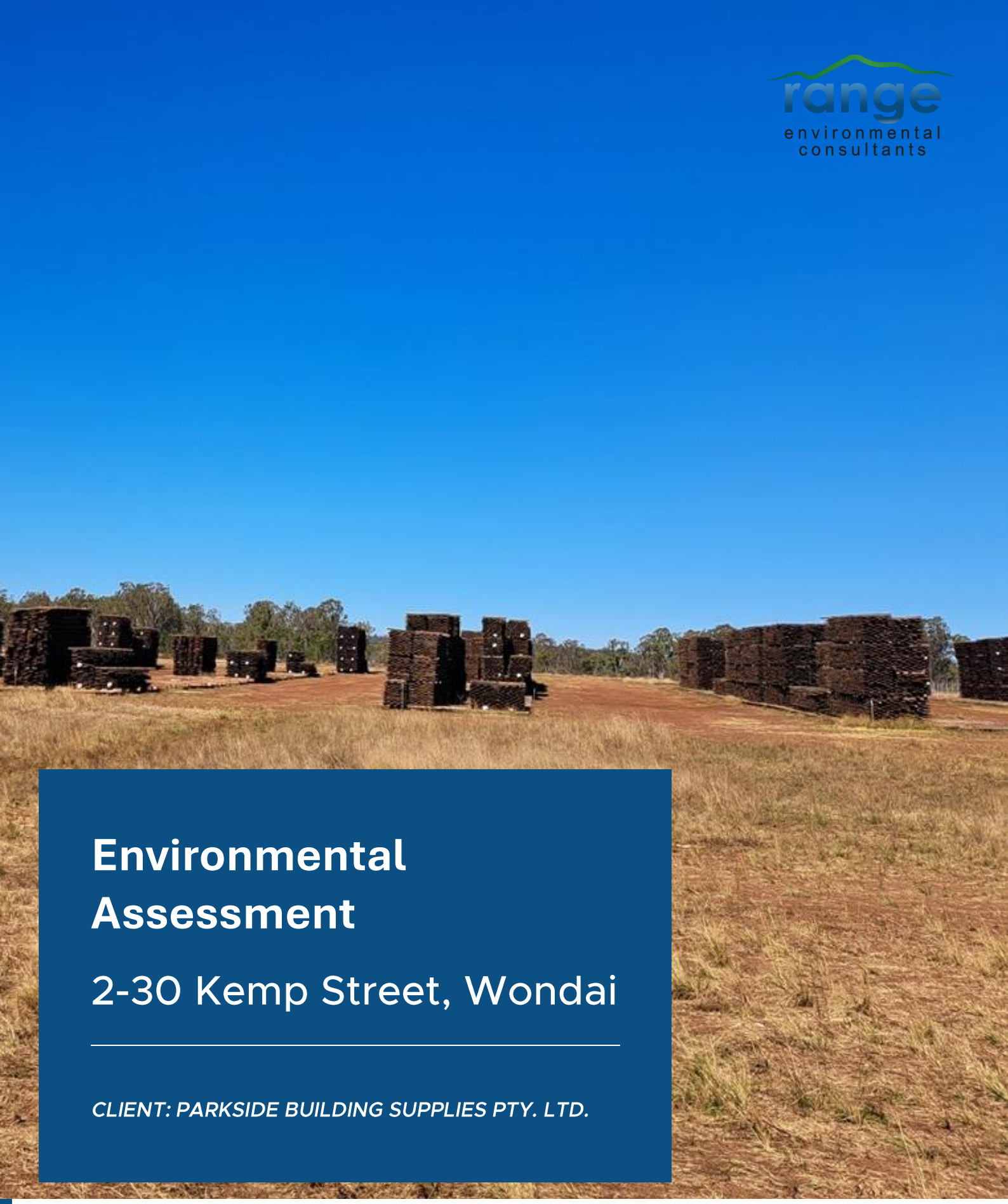

Environmental Assessment

2-30 Kemp Street, Wondai

CLIENT: PARKSIDE BUILDING SUPPLIES PTY. LTD.

PROJECT NO.	**J002200**
STATUS	**FINAL**
DATE	**8/04/2025**
VERSION	**2**

rangeenviro.com.au

Disclaimer

Range Environmental provides this report directly and exclusively to Parkside Building Supplies Pty. Ltd. (the client) for their sole use and solely for the specific purpose for which it is supplied. This report is not to be distributed to any other party without the consent of Range Environmental and Range Environmental will not be liable to any other entity other than the Client in relation to any matters dealt with in this report. Third parties (including, but not limited to, successors or assigns of the Client) may not rely on anything contained in this report whatsoever. The Client indemnifies Range Environmental against any claim, loss, expense, damage or the like arising from any third party which results from the Client providing this report to that third party without the prior knowledge or consent of Range Environmental.

This report has been prepared based on the information, documentation and representations given by the Client to Range Environmental. The Client releases Range Environmental from any claim for damage, cost, loss, expense or the like which is caused or contributed to by the incorrect, inaccurate, false, misleading or deceptive information, documentation or representations given by the Client to Range Environmental. The validity and comprehensiveness of any information given by the Client has not been independently verified by Range Environmental and, for the purposes of this report, it is assumed that the information provided to Range Environmental is both complete and accurate.

Where site inspections, testing, surveying or fieldwork have taken place, this report is based on the site conditions and information made available by the Client or their agents or nominees during the visit, the visual observations and any subsequent discussions with regulatory authorities. It is further assumed that normal activities were being undertaken at the site on the day of the site visit(s), unless explicitly stated otherwise.

The Client acknowledges that this Report and all information and content in it shall at all times be and remain the property of Range Environmental and must not be disclosed to any third party at any time, except with the prior consent of Range Environmental or where the Client is required by statute, rule, regulation, judicial process or in connection with any litigation to which it is a party.

Document Control

Version	Purpose	Lead Author	Reviewer	Approved by	Date
1.	Final Report	MJW	RJM	RJM	7/04/2025
2.	Final Report – updated site plans	MJW	RJM	RJM	8/04/2025

Table of Contents

1 Introduction 7

2 Assessment against Reporting Requirements for EA Amendment Applications 9

2.1 EP Act 9

2.2 EA Amendment Application Form 10

2.3 State Code 22 11

2.4 South Burnett Regional Council 11

3 Site Description 12

3.1 Site Particulars 12

3.2 Existing Approvals and Permits 12

3.3 Site Condition 12

4 Description of Proposed Operations 14

5 Environmental Values of the Site and Surrounds 21

5.1 Biodiversity 21

5.2 Bushfire 27

5.3 Land 27

5.4 Hydrology 29

5.5 Visual Amenity 33

5.6 Cultural Heritage 33

5.7 Air and Noise 33

5.8 Climate 35

6 Emissions Profile 37

7 Environmental Impact Risk Assessment 38

7.1 Context 38

7.2 Scope 38

7.3 Identification of Environmental Risks 38

7.4 Risk Analysis 38

7.5 Risk Evaluation 38

7.6 Risk Treatment and Monitoring 38

8 Summary 50

9 References 51

Tables

Table 1 Assessment against Reporting Requirements for Amendment Applications Generally 9
Table 2 Assessment against Reporting Requirements for Amendment Applications for Environmental Authorities 9
Table 3 Site Particulars 12
Table 4 Site Operations 14
Table 5 Review of related prescribed Environmentally Relevant Activities (ERAs) 20
Table 6 Project Emissions Profile 37
Table 7 Qualitative Environmental Impact Risk Analysis 39
Table 8 SDAP State Code 22: Environmentally Relevant Activities (v3.2) 54
Table 9 Medium Impact Industry Zone Code (South Burnett Planning Scheme 2017 (v2.0)) 60
Table 10 Bushfire hazard overlay code (South Burnett Planning Scheme 2017 (v2.0)) 63

Figures

Figure 1 Site locality 8
Figure 2 Process flowchart 19
Figure 3 Regulated Vegetation map 25
Figure 4 Waterways for Fish Passage 26
Figure 5 Bushfire Hazard overlay mapping 28
Figure 6 Surface water features 30
Figure 7 SBRC Flood Hazard overlay mapping 31
Figure 8 Registered groundwater bores and Potential GDEs 32
Figure 9 Sensitive receptors 34
Figure 10 Monthly Rainfall Distribution 35
Figure 11 Kingaroy Airport Annual Wind Rose 36

Photographs

Photograph 1 View to the south of the site showing sparse grassy groundcover and timber storage 13

Photograph 2 *Typha orientalis* along the south-eastern boundary of the site 13

Appendices

Appendix A Code Response Tables 53

Appendix B Development Plans 64

Appendix C Woodchip Boiler Specifications 65

Appendix D Ecological Database Searches 66

Appendix E EMR/CLR and UXO Searches 67

Appendix F Heritage Database Searches 68

Appendix G Qualitative Risk Assessment Tool 69

1 Introduction

An environmental assessment was undertaken for Parkside Building Supplies Pty. Ltd. for a proposed Briquette Plant at their existing manufacturing site located at 2-30 Kemp Street, Wondai (hereafter 'the site'). The site is formally described as Lot 106 SP331010 (Figure 1).

Parkside Building Supplies currently holds an Environmental Authority (EA) for the site (P-EA-100669267) for Environmentally Relevant Activity (ERA) 48 (1)(a) Timber and laminated product fabrication – manufacturing, in a year, 5000t to 10,000t of reconstituted timber products for the operation of a Glue-lam facility (wooden and laminated product manufacturing). This environmental assessment was undertaken to support an Environmental Authority (EA) amendment application of the site's existing EA (Reference: P-EA-100669267) and an Other Change to a Development Permit for Material Change of Use (MCU23/0025) for High Impact Industry for a proposed briquette plant at the site. This activity constitutes Environmentally Relevant Activity (ERA) 47 (b) Timber milling and woodchipping – milling, in a year, more than 10,000t but not more than 20,000t of timber.

This environmental assessment was prepared in accordance with:

- Email pre-lodgement advice received from the Department of the Environment, Tourism, Science and Innovation (DETSI) on 5 February 2025.
- *Environmental Protection Act 1994* (EP Act).
- Application requirements for activities with impacts to air, land, noise, water, and waste (DETSI Publications ESR/2015/1836 to 1840).
- State Development Assessment Provisions (SDAP) State Code 22: Environmentally Relevant Activities (version 3.2).
- South Burnett Planning Scheme 2017 (Version 2.0).

Figure 1
Site locality

Project: Environmental Assessment

Client: Parkside Building Supplies Pty. Ltd.

Project No.: J002200

Compiled by: MJW Date: 13/02/2025
Approved by: RJM Date: 13/02/2025

Metres
0 100 200

Legend

- Cadastre
- Roads
- Site Boundary

The content of this document includes third party data. Range Environmental Consultants does not guarantee the accuracy of such data.

Source: Cadastral data sourced from DNRME (2025). Aerial imagery sourced from NearMap (2024).

N

range environmental consultants

2 Assessment against Reporting Requirements for EA Amendment Applications

2.1 EP Act

Reporting requirements for amendment applications generally and amendment applications for environmental authorities are provided at Sections 226 and 226A of the EP Act respectively. Table 1 and Table 2 below demonstrate that this environmental assessment report meets the mandatory application reporting requirements.

Table 1 Assessment against Reporting Requirements for Amendment Applications Generally

Report Requirement	Section of Report Addressing Requirement
(1) An amendment application must— (a) be made to the administering authority; and (b) be in the approved form; and (c) be accompanied by the fee prescribed by regulation; and (d) describe the proposed amendment; and (e) describe the land that will be affected by the proposed amendment; and (f) include any other document relating to the application prescribed by regulation.	Refer to the Development application Form 1 – Application details – attachment for an application for an environmental authority (ESR/2015/1791, v8.01) provided with this application.
(2) However, subsection (1)(d) and (e) does not apply to an application for a condition conversion.	Not applicable

Table 2 Assessment against Reporting Requirements for Amendment Applications for Environmental Authorities

Report Requirement	Section of Report Addressing Requirement
(1) If the amendment application is for the amendment of an environmental authority, the application must also—	
(a) describe any development permits in effect under the Planning Act for carrying out the relevant activity for the authority; and	Section 3.2.1
(b) state whether each relevant activity will, if the amendment is made, comply with the eligibility criteria for the activity; and (c) if the application states that each relevant activity will, if the amendment is made, comply with the eligibility criteria for the activity—include a declaration that the statement is correct; and (d) state whether the application seeks to change a condition identified in the authority as a standard condition; and (e) if the application relates to a new relevant resource tenure for the authority that is an exploration permit or GHG permit—state whether the applicant seeks an amended environmental authority that is subject to the standard conditions for the relevant activity or authority, to the extent it relates to the permit; and	Not applicable
(f) include an assessment of the likely impact of the proposed amendment on the environmental values, including—	

(i) a description of the environmental values likely to be affected by the proposed amendment; and (ii) details of emissions or releases likely to be generated by the proposed amendment; and (iii) a description of the risk and likely magnitude of impacts on the environmental values; and (iv) details of the management practices proposed to be implemented to prevent or minimise adverse impacts; and (v) if a PRCP schedule does not apply for each relevant activity—details of how the land the subject of the application will be rehabilitated after each relevant activity ends; and	Section 5 Section 6 Section 7 Refer to Range Environmental's Site Based Management Plan (Reference: J002200)
(g) include a description of the proposed measures for minimising and managing waste generated by amendments to the relevant activity; and	Refer to Range Environmental's Site Based Management Plan (Reference: J002200)
(h) include details of any site management plan or environmental enforcement order issued under section 362(1) that relates to the land the subject of the application.	Not applicable
(2) Subsection (1)(f) does not apply for an amendment application for an environmental authority if— (a) either— (i) the process under chapter 3 for an EIS for the proposed amendment has been completed; or (ii) the Coordinator-General has evaluated an EIS for the proposed amendment and there are Coordinator-General's conditions that relate to the proposed amendment; and (b) an assessment of the environmental risk of the proposed amendment would be the same as the assessment in the EIS mentioned in paragraph (a)(i) or the evaluation mentioned in paragraph (a)(ii).	Not applicable
(3) Also, subsection (1)(a), (d), (e), (f), (g) and (h) does not apply to an application for a condition conversion.	Not applicable
(4) Despite subsection (1)(f), (g) and (h), if the amendment application is for an environmental authority for the prescribed ERA mentioned in the Environmental Protection Regulation 2019, schedule 2, section 13A— (a) it need only include the matters mentioned in subsection (1)(f)(i) to (iv), (g) and (h) to the extent the matters relate to fine sediment, or dissolved inorganic nitrogen, entering the water of the Great Barrier Reef or Great Barrier Reef catchment waters; and (b) subsection (1)(f)(v) does not apply for the amendment application.	Not applicable

2.2 EA Amendment Application Form

A completed Development application Form 1 – Application details – attachment for an application for an environmental authority (ESR/2015/1791, v8.01) has been supplied with the EA amendment application to demonstrate that the application provides all necessary information for a correctly made EA amendment application.

2.3 State Code 22

The performance outcomes of State Code 22: Environmentally Relevant Activities (version 3.2) were incorporated into the environmental assessment. A code response table demonstrating compliance with the performance outcomes of State Code 22 is provided at Appendix A.

2.4 South Burnett Regional Council

The site is zoned as Medium Impact Industry under the South Burnett Planning Scheme 2017 (v2.0). The proposed Briquette Plant complies with Part 6 Zones, Section 6.2.8 – Medium impact industry zone code. Responses to the relevant environmental Performance Outcomes (POs) of the medium impact industry zone code are provided at Appendix A.

3 Site Description

3.1 Site Particulars

Details of the site are provided in Table 3.

Table 3 Site Particulars

Descriptor	Description
Project Proponent	Parkside Building Supplies Pty. Ltd.
Registered Suitable Operator Number	RSO534587
Street Address	2-30 Kemp Street, Wondai
Real Property Description	Lot 106 SP331010
Site Area	11.42 hectares (ha)
Local Government Area	South Burnett Regional Council (SBRC)
Planning Scheme	South Burnett Planning Scheme 2017 (Version 2.0)
Land Use Zoning	Medium Impact Industry

3.2 Existing Approvals and Permits

3.2.1 Planning Approvals

There is an existing Development Permit (Reference: MCU23/0025, dated 27 August 2024) for the site for a Material Change of Use – High Impact Industry (Wooden & Laminated Product Manufacturing) and Environmentally Relevant Activity (ERA).

3.2.2 Environmental Authorities

The existing EA for the site (P-EA-100669267) is for ERA 48 (1)(a) Timber and laminated product fabrication – manufacturing, in a year, 5000t to 10,000t of reconstituted timber products.

3.3 Site Condition

The site was highly disturbed and situated within an industrial area. The approved Glue-lam Facility had not commenced operations at the date of this report and the site was being used by Parkside Building Supplies for storage of timber products in the interim. Vegetation at the site included sparse grass cover and a patch of bulrush (*Typha orientalis*) in the south-eastern corner of the site. The site was relatively flat and fell gently to the east towards Dingo Creek. The following photographs show the condition of the site.

Photograph 1 View to the south of the site showing sparse grassy groundcover and timber storage

Photograph 2 *Typha orientalis* along the south-eastern boundary of the site

4 Description of Proposed Operations

An overview of the proposed Briquette Plant operations is provided at Table 4 and development plans are provided at Appendix B.

Table 4 Site Operations

Aspect of Operations	Description
Facility Operator	• Parkside Building Supplies Pty. Ltd.
Registered Suitable Operator (RSO) Number	• RSO534587
Site	• Lot 106 SP331010
Environmentally Relevant Activities (ERA)	• Existing EA (Reference: P-EA-100669267): ERA 48 (1)(a) Timber and laminated product fabrication – manufacturing, in a year, 5000t to 10,000t of reconstituted timber products. • Proposed under this EA Amendment application: ERA 47 (b) Timber milling and woodchipping – milling, in a year, more than 10,000t but not more than 20,000t of timber.

Annual Throughputs	**Existing**
	• Approximately 6000 tonnes of timber will be processed per annum at maximum capacity (considered to be achieved five (5) years after start-up).
	• Product output will be 30% less than the materials processed per annum (approximately 4200 tonnes) due to processing wastage.
	Proposed
	• The proposed Briquette Plant will receive and process approximately 12,000t of woodchip per year to produce an output of approximately 6,000t of briquette per year.
	• The difference between the tonnage of input and output is due to:
	  • 1300t of the woodchip being used to power the onsite boilers.
	  • The difference in weight of the woodchip compared to the briquettes, and wastage (i.e., briquettes that do not meet the required standards), which is approximately 4700t/year.

Site's Use & Operational Activities	**Existing**
	The existing glue lines building is used to undertake the following operations:
	• *Corymbia citriodora* (Spotted Gum) is delivered to the site via forklift from Parkside Building Supplies' existing operations at the Wondai Dry Mill located at 2-4 & 20 North Street, Wondai (Lot 17 SP118162 and Lot 10 RP819308) for processing.
	• Materials are then finger-jointed (FJ) into either glued laminated timber (Glulam) or deck blanks of varying lengths. All finger jointing activities are completed using polyurethane adhesive.
	• Finger jointed blanks for decking are transported to the existing Wondai Dry Mill via forklift for final machining and oiling.
	• Glulam production is undertaken at the proposed facility, which includes:
	  • FJ deck blanks are planed to 18-19mm laminates.
	  • The laminates are sanded on both faces to ensure positive adhesion.

- The laminates are then placed through the glue applicator (using PA3 Resorcinol adhesive) and then laid in the rotary press for high pressure clamping to complete the face bond.
- Bonded posts and beams are then put through a large planer to complete the profiling process.
- The posts and beams are then docked to length on a large docking machine.
- The posts and beams are then packed, wrapped, and stored within the glue lines building until being transported via forklift to the existing Wondai Dry Mill for despatch.

Note: once the site reaches production capacity, skip dressing (where the product is machined to 22mm thick and graded for Glulam, FJ Deck, or feature grade flooring) is proposed to be undertaken at the site rather than the existing Wondai Dry Mill.

External to the proposed glue lines building, the remainder of the site is used for storage purposes, including the relocated racker & stacker building and designated gravel areas (proximate to the racker & stacker building) which is used for the laydown of timber for drying.

Proposed

The relevant activity is described below and shown as a flowchart at Figure 2:

Delivery and Storage

- Untreated woodchip[1] will be delivered from Parkside Building Supplies' existing sawmill via trucks and stored in the designated concrete sawdust/chip bunker which will have a top loading feed system.
- The total capacity of the sawdust/chip bunker is 500m^3. Although woodchip will be delivered to the site at regular intervals to ensure the bunker is never empty, the total storage capacity of the bunker is unlikely to be reached during operations.
- Processing of the woodchip through the proposed Briquette Plant will be at a rate of 16m^3/h. Therefore, the maximum time that woodchip would be stored in the designated bunker before being processed is approximately four (4) days.

Initial Processing

- The untreated woodchip will then be fed via a belt conveyor through a magnetic separator (to separate out any steel objects) and into a hammer mill to breakdown the woodchip into 15x15mm chips.
  - The hammer mill will include a star screener which will separate out any oversize woodchips following breakdown which will be collected for reprocessing in the hammer mill as required (i.e., no waste woodchip will be generated). The dominant noise source will be the hammer mill, which will be attenuated by approximately 15 dB by a cabin.

Drying Process

- The woodchip will then be pneumatically sucked from the exit of the hammer mill into a cyclone, dispatched via a rotary valve and then directed via an auger to a belt drier to dry the chip. The belt drier will suck hot air (via

[1] The untreated woodchip that will be received at the site is defined as a product and not a 'waste' as it does not meet the definition of a waste under the *Waste Reduction and Recycling Act 2011*. Therefore, ERAs relating to waste management are not applicable.

	a water to air heat exchanger produced by a boiler) over the surface of the woodchip using large fans. • The boilers will be powered using part of the woodchip received at the site that has been blended with green sawdust. Approximately 1300 tonnes of the woodchip/sawdust will be required to power the boilers per annum. The boilers will generate approximately 13 tonnes of waste ash per year. <u>Storage and Ripening</u> • The dried woodchip will then be transferred via pneumatic suction into a storage silo to "ripen" or achieve homogeneity for moisture content. The silo will also provide dust suction and collection to mitigate potential fugitive dust emissions created during the production of the briquettes. The collected dust (byproduct) will be reprocessed via the hammer mill. <u>Briquette Production</u> • The woodchip will then be directed via auger into a briquette press which will apply high pressure and the use of moulds to form the briquettes (150mm x 60mm x 90mm). <u>Packaging</u> • The briquettes will then be directed onto the packaging line where they will be measured and packaged on pallets that will be wrapped using an automatic wrapping machine. • Any "ejected" briquettes that do not meet the required length or height will be bagged and reprocessed back through the hammer mill. Reprocessing of "ejected" briquettes will be infrequent due to the accuracy of the moulds used during briquette production.
Plant, Equipment, and Hazardous Chemicals	**Existing** The site includes the following infrastructure: • Glue lines building with office space. • Relocated racker & stacker building. • 42 carparking spaces and new driveway access across the site. The following chemicals are stored and used on site: • Two (2) x 1000kg IBCs of Jowat PA3 Resorcinol adhesive (950.82) – classified as Dangerous Goods Class 3 under the Australian Dangerous Goods (ADG) Code. • Two (2) x 1000kg IBCs of Jowat Liquid Hardener (950.86) – not classified as a Dangerous Good under the ADG Code. • Three (3) x 10kg drums of Jowat (402.30) – not classified as a Dangerous Good under the ADG Code. • Two (2) x 1000kg IBCs of Jowapur one-component polyurethane adhesive (681.10) – not classified as a Dangerous Good under the ADG Code. • Three (3) x 20kg drums of Jowat separating agent (901.10) – not classified as a Dangerous Good under the ADG Code. • Three (3) x 20kg drums of Jowat (901.20) – classified as Dangerous Goods Class 9 under the ADG Code. Drums and IBCs are stored in the glue-room inside the glue lines building which shall be bunded and climate controlled as per the product specifications. No fuel or oil storage is proposed at the site as all refuelling of plant and equipment shall be undertaken in the designated fuelling area at the existing Wondai Dry Mill. **Proposed**

	The following plant and equipment will be utilised for the proposed Briquette Plant operations (Appendix B): • Top loader fuel (woodchip) storage and dispatch system. • Star screener. • Magnetic separator. • Hammer mill. • Belt drier. • Two (2) briquette press machines and one (1) pellet press. • Auto packaging line. • Two (2) x 120m^3 storage silos. • Three (3) x boilers and boiler fuel (woodchip) bin. Note – there will be no storage or use of chemicals at the proposed Briquette Plant.
Staffing	The site (including both the approved and proposed facilities) will operate with 11 full-time employees (including management, supervisors, administration, and machine operators).
Traffic	The traffic generated from the operation of both the approved and proposed facilities at the site is expected to include: • 11 staff vehicles per day. • Three (3) semi-trailers every 2-3 days.
Hours of Operation	**Existing** • The site is proposed to operate from 7:00am to 3:30pm, Monday to Friday (excluding Public Holidays). **Proposed** • The proposed Briquette Plant will be operational from 7:00am to 5:00pm, Monday to Friday (excluding public holidays). The proposed Briquette Plant will not operate on weekends. • The proposed boilers will be required to operate 24/7 as they cannot be turned off due to efficiency reasons.
Wastes	The waste streams that will be generated at the Briquette Plant are summarised below: • The boilers will generate approximately 13 tonnes of ash per year that will be collected in containers attached to each boiler (Appendix C) and shall be collected by a regulated waste contractor as required. • Separate to this application, Parkside Building Supplies will investigate a market for this waste stream rather than disposing of the waste via a regulated waste contractor. For example, the end of waste (EOW) approvals framework may be used to enable this waste stream to be used as an additive for fertilisers and gardens. • General and recyclable wastes from staff amenities shall be stored in covered bins and removed regularly from the site for disposal or recycling. Note: The following byproducts will be reprocessed and therefore will not generate waste streams (Figure 2): • Initial Processing: Oversized woodchips will be separated out by the star screener and will be reprocessed via the hammer mill. • Storage and Ripening: The collected dust (byproduct) in the silo will be pressed into briquettes with the woodchip as per the normal process.

	• Packaging: Any "ejected" briquettes that do not meet the required length or height will be bagged and reprocessed back through the hammer mill.

Key Mitigation Controls	The key mitigation controls at the proposed Briquette Plant are summarised below and detailed at Table 7:
	• The hammer mill will be contained within a cabin to minimise noise emissions. It is estimated the cabin will provide approximately 15 dB of attenuation when measured from outside the cabin door.
	• Ash generated from the boilers will be collected in containers attached to each boiler (Appendix C) and shall be collected by a regulated waste contractor as required.
	• Air emissions from the proposed Briquette Plant will be released via one (1) exhaust stack above the roofline of the belt drier fans. The air emissions will be a combination of the following sources, which are not listed pollutants under the Environmental Protection (Air) Policy 2019:
	  • Flue gases from the boiler, which are generated from burning woodchip blended with green sawdust, will be filtered to remove pollutants (e.g., carbon monoxide, nitrogen oxides, sulphur oxides, volatile organic compounds and particulate matter). The filtered flue gas will then be piped directly to the belt drier where it will be emitted as 'hot air (excess heat) with the air emissions from the belt drier.
	  • Hot air (excess heat) from the belt drier.

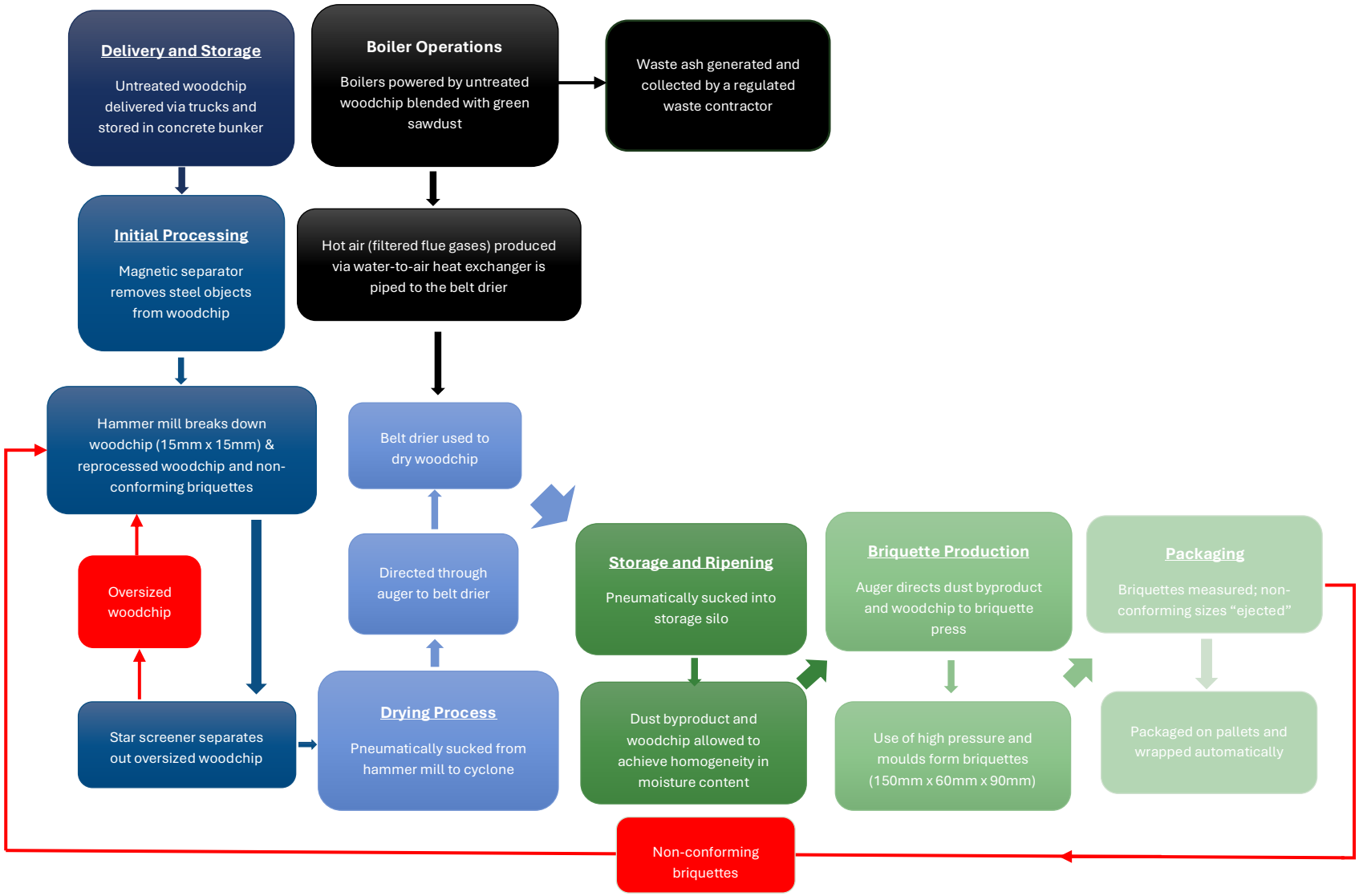

Figure 2 Process flowchart

Table 5 Review of related prescribed Environmentally Relevant Activities (ERAs)

Name of ERA	ERA Description	Relevance to Proposed Briquette Plant Operations
ERA 46 Chemically treating timber	Chemically treating timber for preservation on a commercial basis consists of the following— (a) using chemicals listed in AS1604.1, appendix B, other than copper chromium arsenic or creosote, to treat a total of 1,500m3 or more of timber in a year; (b) using copper chromium arsenic, creosote or a chemical not listed in AS1604.1, appendix B to treat timber.	ERA 46 is **not applicable** to the proposed Briquette Plant operations as the chemical treatment of timber is not proposed to be undertaken.
ERA 47 Timber milling and woodchipping	(b) Timber milling and woodchipping consists of milling more than 10,000t but not more than 20,000t in a year.	ERA 47 (b) is **applicable** to the proposed Briquette Plant operations as: • Milling (including chipping and compressing) of approximately 10,700t of timber per year is proposed. This is based on receiving 12,000 tonnes minus 1300 tonnes for powering the onsite boilers. • The proposed Briquette Plant operations will be carried out independently of the operations associated with the approved Glue-lam Facility (ERA 48) at the site.
ERA 48 Timber and laminated product fabrication	Timber and laminated product manufacture consists of manufacturing, in a year, a total of— (a)5,000t or more of reconstituted timber products; or (b)100t or more of laminated products.	ERA 48 is **not applicable** to the proposed Briquette Plant operations as the manufacture of reconstituted timber products or laminated products will not be undertaken. ERA 48 operations will be restricted to the approved Glue-lam Facility.
Note – no waste management ERAs are applicable to the proposed Briquette Plant operations as the untreated woodchip that will be received at the site for processing does not meet the definition of a waste under Section 8AA (1) of the *Waste Reduction and Recycling Act 2011*. This was confirmed in email pre-lodgement advice received from the DETSI on 5 February 2025.		

5 Environmental Values of the Site and Surrounds

5.1 Biodiversity

The assessment of biodiversity values included a desktop assessment of Local, State and Federal databases and a site inspection to validate the findings of the desktop study. A review was undertaken to identify Prescribed Environmental Matters (PEM) of relevance to the proposed Briquette Plant. Section 10 of the *Environmental Offsets Act 2014* states that PEM include:

- Matters of National Environmental Significance (MNES).
- Matters of State Environmental Significance (MSES).
- Matters of Local Environmental Significance (MLES).

MNES that are PEM are defined at Section 5 of the Environmental Offsets Regulation 2014 and MSES that are PEM are defined at Schedule 2 of the Environmental Offsets Regulation 2014. All MNES and MSES that are PEM (as defined in the Environmental Offsets Regulation 2014) were considered in this assessment.

MLES do not apply to the EA amendment for the proposed Briquette Plant as they are explicitly excluded at Section 6 of the *Development application Form 1 – Application details – attachment for an application for an environmental authority*.

5.1.1 Local Biodiversity Values

The site is not mapped within the Biodiversity Areas Overlay of the South Burnett Planning Scheme 2017 (Version 2.0).

5.1.2 Prescribed Environmental Matters

5.1.2.1 MNES that are PEM

MNES, as described in the *Environmental Protection and Biodiversity Conservation Act 1999* (EPBC Act) that are PEM, are defined at Section 5 of the Environmental Offsets Regulation 2014 and include:

- A declared World Heritage property.
- A National Heritage place.
- A declared Ramsar wetland.
- A threatened species.
- A threatened ecological community.
- A migratory species.
- A Commonwealth marine area.
- The Great Barrier Reef Marine Park established under the *Great Barrier Reef Marine Park Act 1975* (Commonwealth).
- A water resource, within the meaning of the *Water Act 2000* (Commonwealth), to the extent the taking of action mentioned in section 24D or 24E of the EPBC Act in relation to the water resource is prohibited under either of those sections.

It is understood that the operation of the proposed Briquette Plant will not involve the take of or interference with a water resource (as defined under the *Water Act 2000* (Commonwealth)).

For brevity, the full description and definitions of MNES that are PEM are not provided here. Reference should be made to the relevant Commonwealth legislation.

5.1.2.2 MSES that are PEM

MSES that are PEM are defined at Schedule 2 of the Environmental Offsets Regulation 2014 and are summarised below:

- Regulated vegetation.
- Connectivity areas.
- Wetlands and watercourses.
- Designated precinct in a strategic environmental area.
- Protected wildlife habitat.
- Protected areas.
- Highly protected zones of State marine parks.
- Fish habitat areas.
- Waterways providing for fish passage.
- Marine plants.
- Legally secured offset areas.

For brevity, the full description and definitions of MSES that are PEM are not provided here. Reference should be made to Schedule 2 of the Environmental Offsets Regulation 2014.

5.1.2.3 Likelihood of occurrence

Vegetation Communities

Regulated Vegetation mapping shows no Regulated Vegetation is mapped at the site (Figure 3 and Appendix D). The following are also not mapped within the site (Appendix D):

- A prescribed Regional Ecosystem (RE).
- Watercourse or drainage feature on the vegetation management watercourse and drainage features map.
- Essential Habitat.
- A Wetland on the Vegetation Management Wetlands Map.

The Protected Matters Search Tool (PMST) identified three (3) Threatened Ecological Communities (TECs) that have the potential to occur in the area (Appendix D). The site inspection confirmed that no TECs occur at the site.

Wetlands

There are no Referable Wetlands, Wetland Protection Areas, High Ecological Value Waters, wetlands of International Importance (Ramsar), or any other wetlands mapped at or adjoining the site (Appendix D).

The site inspection identified a patch of bulrush (*Typha orientalis*) in the south-eastern corner of the site that continues offsite to the north-east. Although this vegetation is often associated with wetlands, its occurrence at the site is likely a result of overland stormwater flow and the point of discharge for the site being located along the eastern boundary.

Strategic Environmental Area

The site and surrounding land are not mapped as a Designated Precinct in a Strategic Environmental Area under the *Regional Planning Interests Act 2014*. Therefore, this PEM is not relevant to the proposed Briquette Plant.

Threatened Species and Protected Wildlife Habitat

The PMST search identified 16 threatened flora species, 29 threatened fauna species and nine (9) migratory species that could potentially occur within 5 km of the site based on habitat (Appendix D). The PMST search is a predictive model that identifies all species that could potentially occur, or suitable habitat that could potentially occur, and does not necessarily mean the species has been previously recorded in the area. A search of the Wildlife Online database identified that one (1) threatened flora species (*Aponogeton elongatus subsp. elongatus*) and one (1) threatened fauna species (*Petauroides volans volans* (southern greater glider)) has been recorded within a 5 km buffer of the site (Appendix D). No threatened species records occurred at the site under Biomaps.

The site is not mapped within a 'High Risk Area' for protected plants or in a Koala Habitat Area (KHA) under SDAP mapping (Appendix D). The site is located within Koala District C.

Vegetation at the site included sparse grass cover and a patch of bulrush (*Typha orientalis*) in the south-eastern corner of the site. Much of the site was highly disturbed and provided low potential for habitat for any threatened species.

Protected Areas & Offset Areas

The site is not within or adjoining (within 5 km of the site) a declared World Heritage Property, a National Heritage place, a Protected Area, or a Legally Secured Offset Area (Appendix D). Therefore, this PEM is not relevant to the proposed Briquette Plant.

Waterways Providing for Fish Passage and Fish Habitat Areas

The site does not include mapped waterways for fish passage under SDAP mapping (Figure 4). The nearest waterway for waterway barrier works to the site is a major risk of impact (purple) waterway located approximately 150 m east. A declared Fish Habitat Area (FHA) does not occur at or within 500 m of the site. The nearest declared FHA to the site (Noosa River) is located approximately 109 km east of the site. Therefore, this PEM is not relevant to the proposed Briquette Plant.

Marine Parks and Plants

The PMST search confirmed that the site is not within or adjoining any of the following areas (Appendix D):

- Highly protected zone of a State marine park.
- A Commonwealth marine area.
- The Great Barrier Reef Marine Park established under the *Great Barrier Reef Marine Park Act 1975* (Commonwealth).

The site is located approximately 130 km from the nearest highly protected marine park (Moreton Bay Marine Park Pumicestone Channel (north)). Therefore, marine plants do not occur at or within 500 m of the site.

Therefore, this PEM is not relevant to the proposed Briquette Plant.

Connectivity Areas

There are no prescribed regional ecosystems that will be impacted by the proposed Briquette Plant. Therefore, this PEM is not relevant to the proposed Briquette Plant.

5.1.3 Summary

The desktop assessment and site inspection confirmed the following:

- The site is highly disturbed and has no notable ecological value.
- No MLES will be impacted by the proposed Briquette Plant.
- No PEM (MSES or MNES) will be impacted by the proposed Briquette Plant.

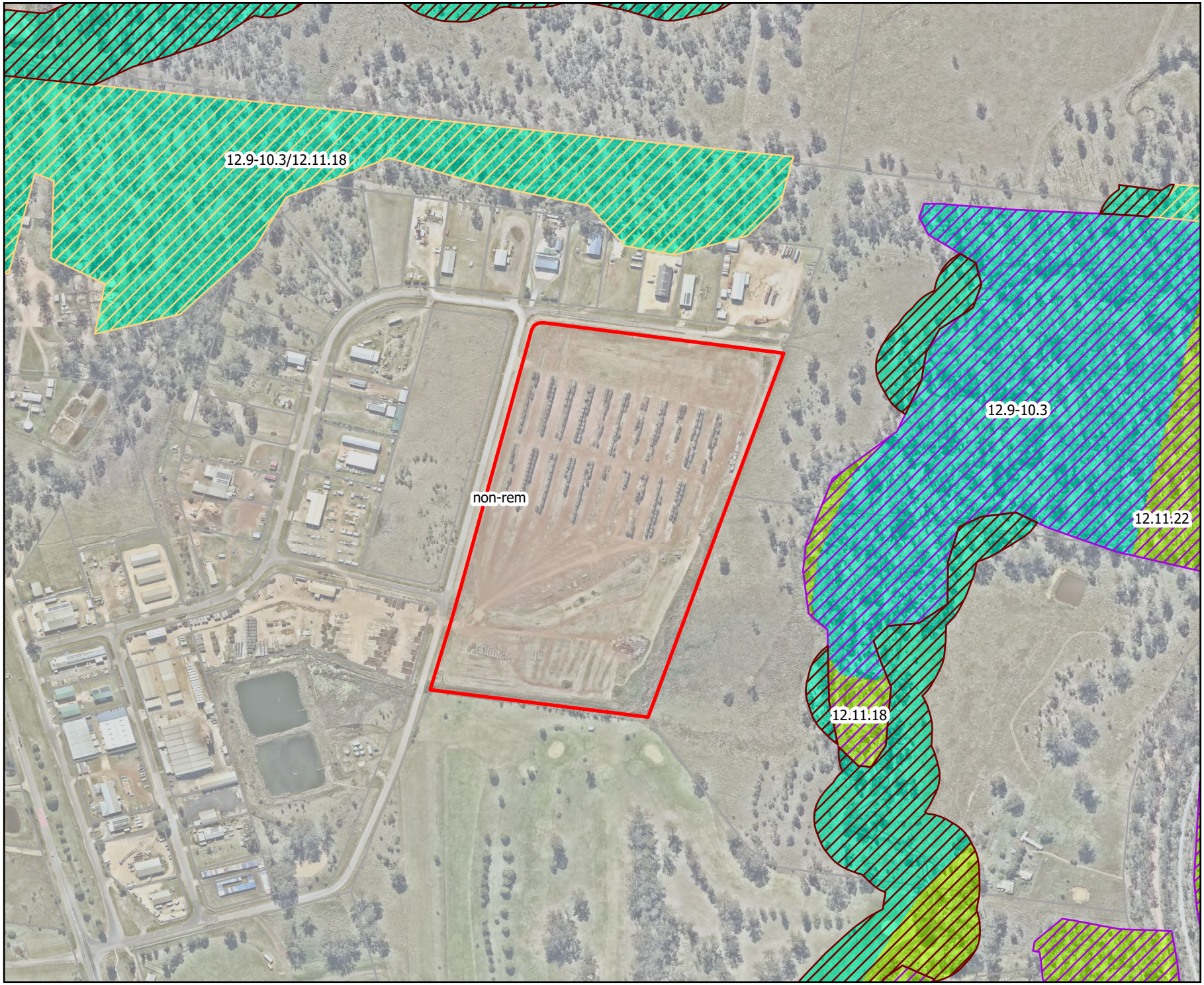

Figure
Regulated Vegetation map

Project: Environmental Assessment

Client: Parkside Building Supplies Pty. Ltd.

Project No.: J002200

Compiled by: MJW Date: 13/02/2025
Approved by: RJM Date: 13/02/2025

Metres
0 76 152

Legend

- Cadastre
- Site Boundary

Regulated Vegetation

- Category B
- Category C
- Category R

Regional Ecosystems

- Of concern
- Least concern
- Non-remnant

The content of this document includes third party data. Range Environmental Consultants does not guarantee the accuracy of such data.

Source: Cadastral data sourced from DNRME (2025). Aerial imagery sourced from NearMap (2024).

N

range environmental consultants

Figure 4 Waterways for Fish Passage

Project: Environmental Assessment

Client: Parkside Building Supplies Pty. Ltd.

Project No.: J002200

Compiled by: MJW Date: 13/02/2025
Approved by: RJM Date: 13/02/2025

Metres
0 76 152

Legend

- Cadastre
- Site Boundary

Queensland waterways for waterway barrier works

- 1 - Low
- 2 - Moderate
- 3 - High
- 4 - Major

The content of this document includes third party data. Range Environmental Consultants does not guarantee the accuracy of such data.

Source: Cadastral data sourced from DNRME (2025). Aerial imagery sourced from NearMap (2024).

N

range environmental consultants

5.2 Bushfire

The South Burnett Planning Scheme 2017 (Version 2.0) Bushfire Hazard Overlay Map, which is consistent with the State Planning Policy (SPP) Natural Hazards Risk and Resilience (Bushfire prone area) mapping, shows that the site contains areas of Potential Impact Buffer in the northern extent of the site (Figure 5).

The proposed Briquette Plant complies with the relevant bushfire hazard overlay code POs of the South Burnett Planning Scheme 2017 (Version 2.0) as it does not occur in an area mapped as Very High, High or Medium Potential Bushfire Intensity Areas (Appendix A).

5.3 Land

5.3.1 Topography

The site is located at an elevation of 303-309 m Australian Height Datum (mAHD), with an average slope of 0.4% towards Dingo Creek (east) (Appendix D).

5.3.2 Geology

Detailed surface geology mapping provided in QLD Globe shows that the site intersects areas of ferricrete and alluvium.

5.3.3 Soils

Native soils of the region are broadly described by the Bureau of Rural Sciences (2009) as hard pedal mottled-yellow duplex soils.

5.3.4 Agricultural Land

The site is mapped as an Important Agricultural Area and Class A1 Agricultural land (crop land – broadacre and horticulture) under SPP mapping (Appendix D). The site is also mapped as Agricultural Land under the Agricultural Land Overlay of the South Burnett Planning Scheme 2017 (Version 2.0). Land immediately adjacent to the east of the site is mapped within a stock route network under SPP mapping.

The site is not currently used as agricultural land and has limited agricultural value as it is heavily disturbed land. Land use mapping in QLD Globe shows no cropping uses within 2 km of the site.

5.3.5 Contaminated Land

A search of the Environmental Management Register (EMR) and Contaminated Land Register (CLR) determined that the site is not included on the EMR or CLR (Appendix E). The site was not recorded on the Department of Defence's Unexploded Ordnance (UXO) database (Appendix E).

5.3.6 Acid Sulphate Soils

Acid sulphate soils (ASS) are a characteristic feature of marine and estuarine sediments in low lying coastal environments, particularly where landform elevations are below 5 m AHD. The site is located approximately 125 km inland and at an elevation of 303-309m AHD. The site is not mapped in an ASS hazard area under QLD Globe. ASS are unlikely to occur at the site due to its elevation, geological and geomorphic setting.

figure

Bushfire Hazard overlay mapping

Project: Environmental Assessment

Client: Parkside Building Supplies Pty. Ltd.

Project No.: J002200

Compiled by: MJW Date: 13/02/2025
Approved by: RJM Date: 13/02/2025

0 49 98 Metres

Legend

- Cadastre
- Site Boundary

Bushfire Hazard Area

- Very High Potential Bushfire Intensity
- High Potential Bushfire Intensity
- Medium Potential Bushfire Intensity
- Potential Impact Buffer

The content of this document includes third party data. Range Environmental Consultants does not guarantee the accuracy of such data.

Source: Cadastral data sourced from DNRME (2025). Aerial imagery sourced from NearMap (2024).

N

range environmental consultants

5.4 Hydrology

5.4.1 Surface Water

The local area drains to the east towards Dingo Creek located approximately 150 m east of the site (Figure 6). Dingo Creek (4th order stream) flows to the north-east where it enters Yellow Waterhole Creek (5th order stream). Yellow Waterhole Creek flows to the north to Barambah Creek (7th order stream).

5.4.2 Flood Hazard

The north-eastern portion of the site is mapped in a Flood Hazard Area under the Flood Hazard Overlay of the South Burnett Planning Scheme 2017 (Version 2.0) (Figure 7). To achieve compliance with the relevant flood hazard overlay POs under the Medium impact industry zone code (Appendix A), the stormwater management strategy outlined in ATC Engineers' (2025) Preliminary Stormwater Management Report shall be fully implemented.

5.4.3 Groundwater

There are five (5) registered groundwater bores within a nominal 1 km buffer of the site (Figure 8). The bore cards for these bores were reviewed (Appendix D). The shallowest aquifer recorded in the area was a clay aquifer 33.5 m below ground level in the Maronghi Creek Beds.

The site was not mapped as including a Potential Groundwater Dependent Ecosystem (GDE) aquifer (Figure 8). A Potential GDE aquifer is one that potentially supports surface expression and terrestrial GDEs in the landscape. A surface expression GDE is mapped approximately 110 m east of the site and Terrestrial GDE areas are mapped approximately 725 m south-west of the site.

No groundwater GDE were observed at or near the site which had been heavily disturbed.

Figure
Surface water features

Project: Environmental Assessment

Client: Parkside Building Supplies Pty. Ltd.

Project No.: J002200

Compiled by: MJW Date: 13/02/2025
Approved by: RJM Date: 13/02/2025

0 92 184 Metres

Legend

- Cadastre
- Site Boundary
- Water Act 2000 - watercourse
- Vegetation management watercourse and drainage feature map
- Area of Typha orientalis

The content of this document includes third party data. Range Environmental Consultants does not guarantee the accuracy of such data.

Source: Cadastral data sourced from DNRME (2025). Aerial imagery sourced from NearMap (2024).

N

range environmental consultants

SBRC Flood Hazard overlay mapping

Project: Environmental Assessment

Client: Parkside Building Supplies Pty. Ltd.

Project No.: J002200

Compiled by: MJW Date: 13/02/2025
Approved by: RJM Date: 13/02/2025

0 41 82 Metres

Legend

- Cadastre
- Site Boundary
- Flood Hazard Area

The content of this document includes third party data. Range Environmental Consultants does not guarantee the accuracy of such data.

Source: Cadastral data sourced from DNRME (2025). Aerial imagery sourced from NearMap (2024).

N

range environmental consultants

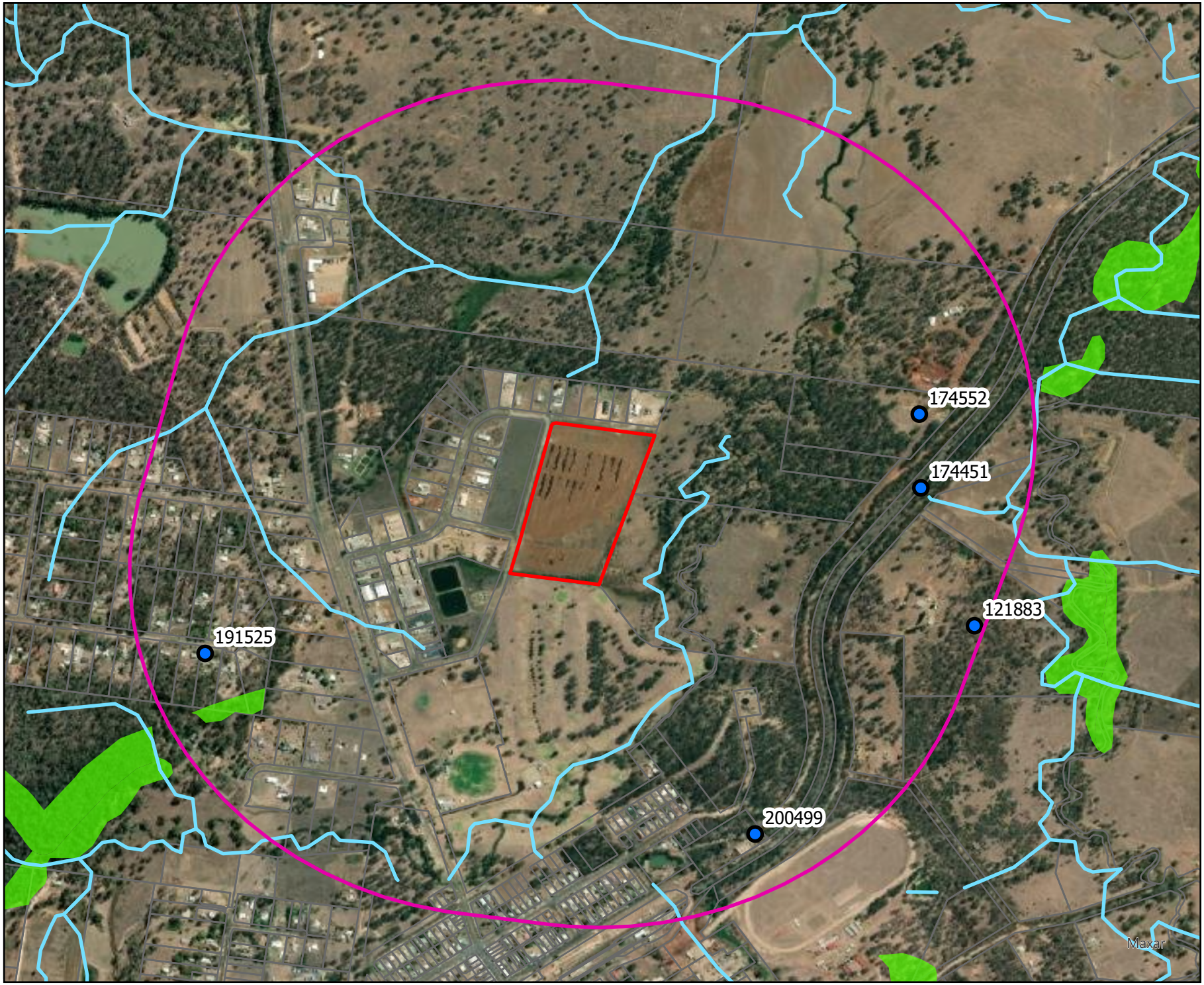

Registered groundwater bores and Potential GDEs

Project: Environmental Assessment

Client: Parkside Building Supplies Pty. Ltd.

Project No.: J002200

Compiled by: MJW Date: 14/02/2025
Approved by: RJM Date: 14/02/2025

Metres
0 180 360

Legend

- Cadastre
- Site Boundary
- Nominal 1km buffer
- Registered groundwater bores
- Surface expression GDE
- Terrestrial GDE areas

The content of this document includes third party data. Range Environmental Consultants does not guarantee the accuracy of such data.

Source: Cadastral data sourced from DNRME (2025). Aerial imagery sourced from NearMap (2024).

N

range environmental consultants

5.5 Visual Amenity

The site is zoned as Medium Impact Industry and is located within an industrial area. The visual amenity of the site will be consistent with the surrounding area and meets the relevant POs under the medium impact industry zone code (Appendix A).

5.6 Cultural Heritage

The site does not have any recorded indigenous or other cultural heritage values as demonstrated in the following sections. The site is heavily disturbed and is therefore unlikely to contain areas or items of cultural heritage value.

5.6.1 Indigenous Cultural Heritage

A search of the Department of Aboriginal and Torres Strait Islander Partnerships' Cultural Heritage Database and Register determined the following regarding the site and a nominal 5 km surrounding buffer (Appendix F):

- No Aboriginal cultural heritage site points were recorded at the site.
- Two (2) Aboriginal cultural heritage site points were recorded in the specific search area (scarred trees). These sites were associated with McEuen State Forest.

There is an active native title claim over the entirety of the site (Appendix F). The details of the claim are outlined below:

- Name: Wakka Wakka People
- Tribunal Number: QC2016/003
- Federal Court Number: QUD276/2019
- Date Registered: 2 June 2016
- Representative: Queensland South Native Title Services Ltd
- Area: 17.83km^2

However, the land tenure of the site is Freehold; therefore, the land and the proposed Briquette Plant are not affected by this claim.

5.6.2 Other Cultural Heritage

The site has no other cultural heritage values recorded on Local, State or Federal databases or registers (Appendix F).

5.7 Air and Noise

The site is zoned as Medium Impact Industry and is located within an industrial area. Land uses in the local area of relevance to ambient air and noise levels include:

- The Bunya Highway occurs approximately 473 m west of the site.
- Industry operations of note include Parkside Building Supplies' existing operations (ERA 46 (1) and ERA 47 (a) and (c)) to the south-west, SBRC's waste disposal facility (ERA 60 (1)(a)) to the north-east, and SBRC's sewage treatment plant (ERA 63 (1)(b)(i)) to the south-east.
- Rural land uses, namely intensive animal husbandry and grazing native vegetation, are the dominant land uses in the broader regional landscape.

All noise and air quality sensitive receptors within a nominal 500 m of the site are shown in Figure 9.

Figure 9 Sensitive receptors

Project: Environmental Assessment

Client: Parkside Building Supplies Pty. Ltd.

Project No.: J002200

Compiled by: MJW Date: 7/04/2025
Approved by: RJM Date: 7/04/2025

Metres
0 100 200

Legend

- Cadastre
- Roads
- Site Boundary
- Nominal 500m buffer
- Proposed briquette facility

Sensitive receptors

- Air receptor only
- Noise and air receptor

The content of this document includes third party data. Range Environmental Consultants does not guarantee the accuracy of such data.

Source: Cadastral data sourced from DNRME (2025). Aerial imagery sourced from NearMap (2024).

N

range environmental consultants

5.8 Climate

This section provides a description of the climatic features of the region based on data from the Bureau of Meteorology's (BoM) Kingaroy Airport weather station (station no. 040922), which is located approximately 37 km south of the site.

5.8.1 Temperature

The area experiences a warm climate with hot summers (average maximum of 30.9°C in January) and cold winters (average minimum of 3.9°C in July).

5.8.2 Rainfall

The monthly distribution of median rainfall demonstrates that the region experiences distinct wet and dry seasons (Figure 10). Most rainfall occurs over summer (October to March) with the least rainfall received in the middle of the year (April to September).

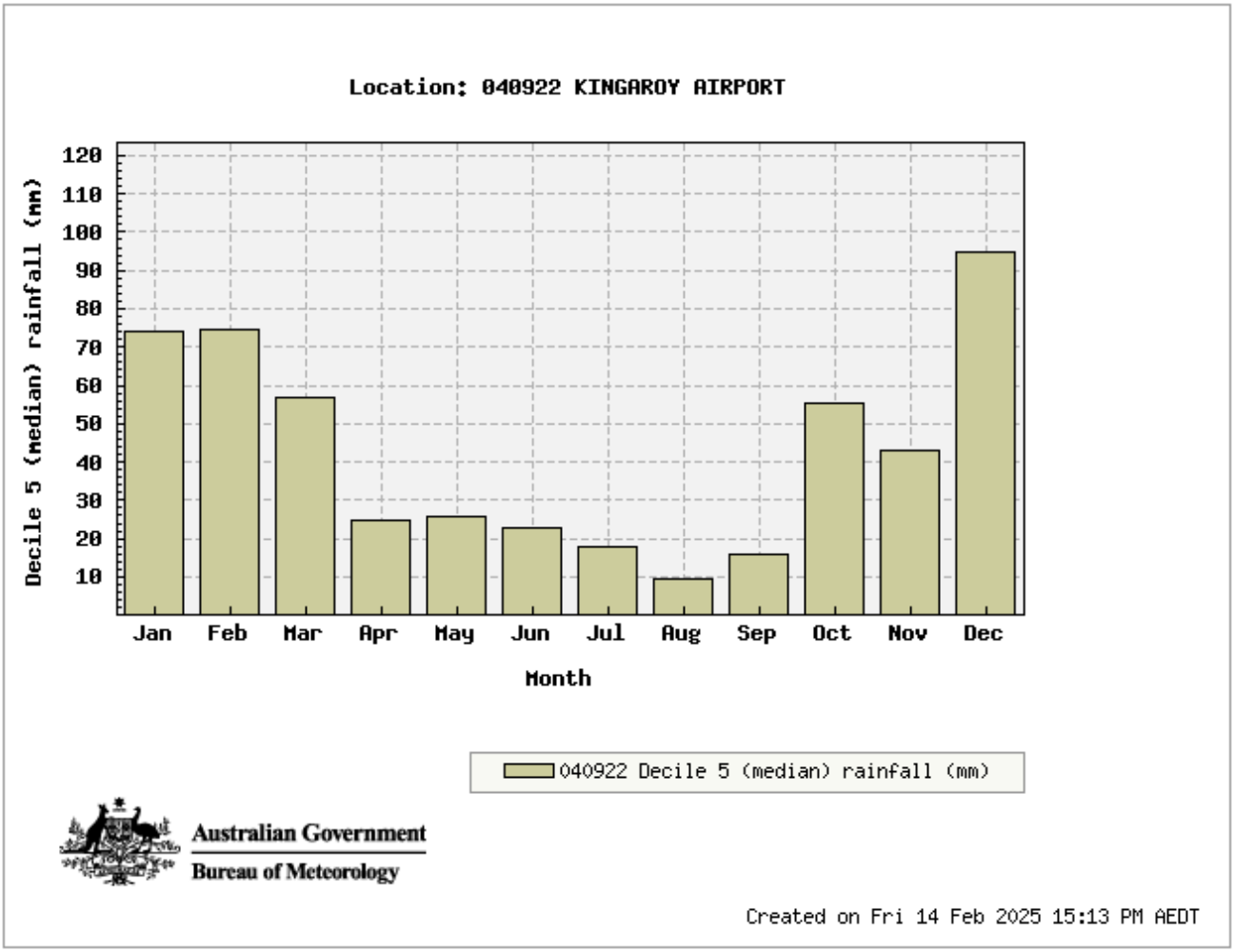

Figure 10 Monthly Rainfall Distribution

5.8.3 Wind

An annual wind rose for the area is presented at Figure 11 below for the Kingaroy Airport (station no. 040922) which shows that the prevailing annual wind direction is from the east to south-east (BoM, 2024).

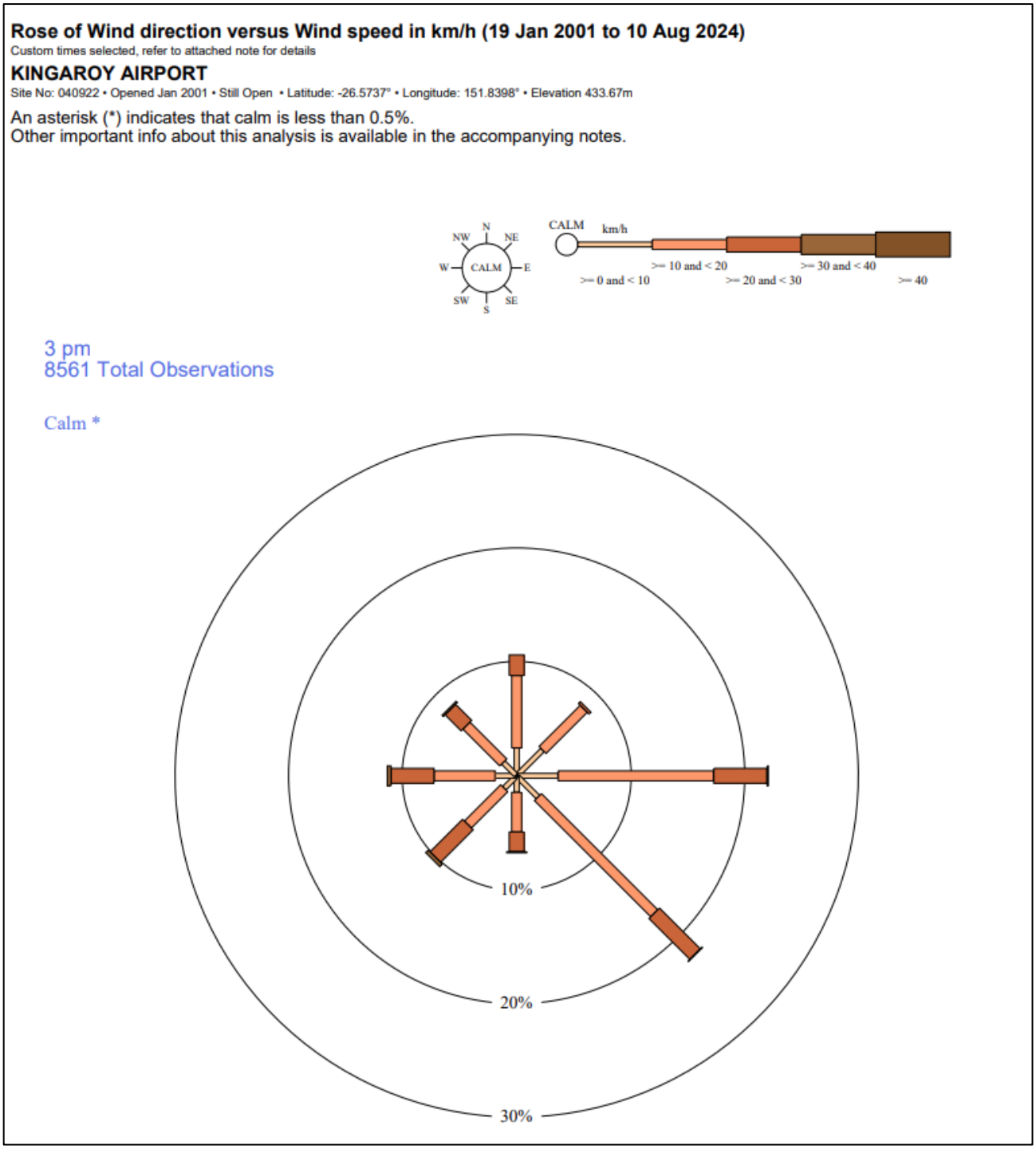

Figure 11 Kingaroy Airport Annual Wind Rose

6 Emissions Profile

A project emissions profile is provided in Table 6 to describe potential emission sources from the proposed Briquette Plant at the site.

Table 6 Project Emissions Profile

Emission Type and Description	Potential Source and Impact
Amenity – Noise, Air, Greenhouse Gas Emissions, Odour and Light	
Noise emissions from site operations.	• Noise emissions from the operation of plant/equipment and vehicle movements causes nuisance at sensitive receptors.
Air emissions from site operations.	• Air emissions from the operation of plant and equipment causes harm at sensitive receptors.
Greenhouse gas emissions (GHG) from site operations.	• GHG emissions are released to the atmosphere as a direct result of the operation of the proposed Briquette Plant (i.e., Scope 1 under the DETSI's GHG Guideline) that significantly contribute to climate change.
Odour emissions from site operations.	• Odour emissions from the storage of stockpiled woodchip and processing operations causes nuisance at sensitive receptors.
Light emissions from site operations.	• Nil – no light emissions are expected due to the proposed daytime hours of operation (7:00am to 5:00pm).
Water	
Release of contaminated floodwaters or stormwater from the site.	• Floodwaters or stormwater runoff from the site may entrain woodchip or high sediment loads from the unsealed areas at the site.
Spills or leaks of liquid contaminants to surface water or groundwater.	• Spill/leak during plant maintenance activities or equipment failure causes a release of contaminants to stormwater, surface water or groundwater.
Release of firefighting water during an emergency at the site.	• Contaminated firewater is released from the site during an emergency and adversely impacts water quality.
Accidental spills, leaks, or losses of wastes at the site.	• Poor management of wastes causes a release to waters.
Land	
Spills or leaks of liquid contaminants to land.	• Spill/leak during plant maintenance activities or equipment failure causes a release of contaminants to soil.
Release of firefighting water during an emergency at the site.	• Contaminated firewater is released from the site during an emergency and adversely impacts soil quality.
Accidental spills, leaks, or losses of wastes at the site.	• Poor management of wastes causes a release to land.

7 Environmental Impact Risk Assessment

A qualitative environmental risk assessment was undertaken with reference to HB 203:2006 Environmental Risk Management - Principles and process (Standards Australia, 2006) to assess the environmental risk presented to the local environmental values described at Section 5.

7.1 Context

- The proposal is for the development of a Briquette Plant at the site which requires approval for ERA 47 (b) Timber milling and woodchipping – more than 10,000t but not more than 20,000t per year.
- Major stakeholders that have a strong interest in the operations of the proposed Briquette Plant include:
  - South Burnett Regional Council.
  - Department of the Environment, Tourism, Science and Innovation.
  - Industry/companies purchasing the products from the Briquette Plant.
  - Neighbouring land holders and businesses located near the site.
- The site is zoned as Medium Impact Industry and is located within an industrial area. The dominant surrounding land use is rural and industrial, and residential in the broader area.

7.2 Scope

To determine the level of environmental risk presented by the proposed Briquette Plant operations on local environmental values.

7.3 Identification of Environmental Risks

The risk of potential impacts on environmental values are identified in Table 7 below.

7.4 Risk Analysis

A qualitative analysis of environmental risk for the proposed Briquette Plant is provided in Table 7 below. The risk analysis tool is provided at Appendix G.

7.5 Risk Evaluation

As shown in Table 7 below, the proposed Briquette Plant was found to present a low risk of adverse environmental impact.

7.6 Risk Treatment and Monitoring

The Site Based Management Plan (SBMP) prepared by Range Environmental (Reference: J002200) describes how environmental risks will be treated and monitored to maintain a low level of environmental risk for the future operation of the Briquette Plant.

Table 7 Qualitative Environmental Impact Risk Analysis

Environmental Value	Potential Impact	Likelihood	Consequence	Risk	Comment
Land	Spill/leak during plant maintenance activities or equipment failure causes a release of contaminants to soil.	Unlikely	Insignificant	Low	• All processing activities shall be undertaken inside the proposed Briquette Plant building which will have a sealed concrete slab. • Plant and equipment shall be maintained as per the manufacturer's specifications to prevent spills and leaks of hydrocarbons. • Maintenance and major service/repair works to plant and/or equipment shall be undertaken at an offsite workshop. On-site repairs shall only occur if the works are minor maintenance, or the plant or equipment cannot be moved under its own power. • Spill kits shall be provided for immediate clean-up of any accidental spills/leaks. • Spills and leaks of contaminants at the site are not anticipated to present a significant soil contamination risk.
	Contaminated firewater is released from the site during an emergency and adversely impacts soil quality.	Unlikely	Minor	Low	• The SBMP outlines measures that shall be taken to reduce the risk of fire at the site and emergency response measures, including, the management of firewater. • In the event of a fire at the site, the use of firewater shall be minimised as far as reasonably practicable and measures to contain firewater onsite shall be employed as required. • The proposed Briquette Plant is not anticipated to present a significant soil contamination risk in the event of a fire.

Environmental Value	Potential Impact	Likelihood	Consequence	Risk	Comment
	Poor management of wastes causes a release to land.	Rare	Insignificant	Low	• All processing activities shall be undertaken inside the proposed building on sealed concrete hardstand. • General and recyclable wastes from staff amenities shall be stored in covered bins and removed from site regularly. • Regulated wastes generated from on-site maintenance activities (e.g., waste oils, oil filters, oily rags, etc.) shall be stored in closed containers inside the Briquette Plant building and be removed offsite by a licensed regulated waste contractor as required. • Ash generated from the operation of the boilers shall be collected in containers attached to each boiler (Appendix C) and disposed of offsite by a regulated waste contractor as required. The relevant EOW approvals shall be sought by the applicant prior to reusing ash as a saleable product. • There shall be no onsite waste disposal or burning of wastes. • Storage of wastes at the site is not anticipated to present a significant soil contamination risk.
Water	Floodwaters or stormwater runoff from the site may entrain woodchip or high sediment loads from the unsealed areas at the site.	Occasionally	Insignificant	Low	• All processing activities shall be undertaken inside the proposed Briquette Plant building on sealed concrete hardstand. • Regular maintenance shall be undertaken to collect any loose woodchip (e.g., sweeping, vacuum, etc.). • The site shall maintain the existing point of discharge along the eastern boundary.

Environmental Value	Potential Impact	Likelihood	Consequence	Risk	Comment
					• A bioretention trench shall be constructed along the eastern boundary of the site to collect stormwater runoff prior to leaving the site to filter out sediment and attenuate peak flows. • All buildings at the site shall be connected to attenuation tanks that connect to the downpipes of the buildings and discharge at a low flow to the bioretention trench. • The SBMP outlines measures that shall be taken to prepare the site for heavy rainfall or a flooding event and associated emergency response measures. • The proposed Briquette Plant is not anticipated to present a significant contamination risk to floodwaters or stormwater with the implementation of the SBMP and the Preliminary Stormwater Management Report prepared by ATC Engineers (2025).
	Spill/leak during plant maintenance activities or equipment failure causes a release of contaminants to stormwater, surface water or groundwater.	Unlikely	Insignificant	Low	• All processing activities shall be undertaken inside the proposed Briquette Plant building on sealed concrete hardstand. • Plant and equipment shall be maintained in accordance with the manufacturer's specifications to prevent spills and leaks of hydrocarbons. • Maintenance and major service/repair works to plant and/or equipment shall be undertaken at an offsite workshop. On-site repairs shall only occur if the works are minor maintenance, or the plant or equipment cannot be moved under its own power. • Spill kits shall be provided for immediate clean-up of any accidental spills/leaks.

Environmental Value	Potential Impact	Likelihood	Consequence	Risk	Comment
					• Dingo Creek is located approximately 150 m from the site. • Groundwater is deep (at least 33.5m) and at a low risk of impact. • Spills and leaks of contaminants at the site are not anticipated to present a significant contamination risk to waters.
	Contaminated firewater is released from the site during an emergency and adversely impacts water quality.	Unlikely	Minor	Low	• Groundwater is deep (at least 33.5m) and at a low risk of impact. • Dingo Creek is located approximately 150 m from the site. • The SBMP outlines measures that shall be taken to reduce the risk of fire at the site and emergency response measures, including, the management of firewater. • In the event of a fire at the site, the use of firewater shall be minimised as far as reasonably practicable and measures to contain firewater onsite shall be employed as required. • The proposed Briquette Plant is not anticipated to present a significant contamination risk to waters in the event of a fire.
	Poor management of wastes causes a release to waters.	Rare	Insignificant	Low	• All processing activities shall be undertaken inside the proposed Briquette Plant building on sealed concrete hardstand. • General and recyclable wastes from staff amenities shall be stored in covered bins and removed from site regularly. • Regulated wastes from on-site maintenance activities (e.g., waste oils, oil filters, oily rags, etc.)

Environmental Value	Potential Impact	Likelihood	Consequence	Risk	Comment
					shall be stored in closed containers inside the Briquette Plant building and be removed offsite by a licensed regulated waste contractor as required. • Ash generated from the operation of the boilers shall be collected in containers attached to each boiler (Appendix C) and disposed of offsite by a regulated waste contractor as required. The relevant EOW approvals shall be sought by the applicant prior to reusing ash as a saleable product. • There shall be no onsite waste disposal or burning of wastes. • Storage of wastes at the site is not anticipated to present a significant contamination risk to waters.
Noise, Air, Odour and GHG emissions	Noise emissions from the operation of plant/equipment and vehicle movements causes nuisance at sensitive receptors.	Unlikely	Insignificant	Low	• The site is located within an industrial area. Nearby land uses include a transport depot, other manufacturing facilities, roads, and retail premises. • The nearest noise sensitive receptors to the site are shown in Figure 9. The closest noise sensitive receptor to the site is located approximately 193m west. • Primary noise sources at the proposed Briquette Plant will be mechanical plant and equipment. An estimated noise level of 95 dB(A) indoors for the Briquette Plant was calculated from information provided by Recycling Technologies Group. The dominant noise source will be the hammer mill, which will be attenuated by approximately 15 dB by a cabin. • A distance attenuation calculation was undertaken based on the general rule that noise will decrease by 6 dB with a doubling of distance from a point source

Environmental Value	Potential Impact	Likelihood	Consequence	Risk	Comment
					(DES, 2020). Based on an estimated noise level of 95 dB(A) at the façade of the proposed Briquette Plant building and a distance of 193 m (Figure 9), the calculated noise level at the nearest noise sensitive receptor (commercial premise) was 49 dB(A)[2]. This complies with the commercial (indoor) Acoustic Quality Objectives (AQOs) of 52 dB[3] provided at Schedule 1 of the Environmental Protection (Noise) Policy 2019 (EPP Noise) when the commercial premises is open for business. • The SBMP outlines measures that shall be taken to reduce noise emissions from the operation of the Briquette Plant at the site. • No significant impacts to amenity in relation to noise emissions from the proposed Briquette Plant are anticipated.
	Air emissions from the operation of plant and equipment causes harm at sensitive receptors.	Unlikely	Insignificant	Low	• The nearest air quality sensitive receptors to the site are shown in Figure 9. The closest air quality sensitive receptor to the site is located approximately 152m west. • Ash generated from the boilers will be collected in containers attached to each boiler (Appendix C) and shall be collected by a regulated waste contractor as required.

[2] Attenuation from 1m (façade of proposed briquette facility) to 193m (façade of nearest noise sensitive receptor) = 45.6 dB total attenuation (rounded to 46 dB (nearest whole number) for comparison with the noise assessment criteria) (DES, 2020). 95 dB – 46 dB = 49 dB.

[3] Assuming a 7 dB(A) correction to account for the façade attenuation provided by a normal, naturally ventilated building with opened windows (ASK Consulting Engineers, 2011 & EPA, 2004).

Environmental Value	Potential Impact	Likelihood	Consequence	Risk	Comment

					• Air emissions from the proposed Briquette Plant will be released via one (1) exhaust stack above the roofline of the belt drier fans. The air emissions will be a combination of the following sources, which are not listed pollutants under the Environmental Protection (Air) Policy 2019:
					  ◦ Flue gases from the boiler, which are generated from burning woodchip blended with green sawdust, will be filtered to remove pollutants (e.g., carbon monoxide, nitrogen oxides, sulphur oxides, volatile organic compounds and particulate matter. The filtered flue gas will then be piped directly to the belt drier where it will be emitted as 'hot air (excess heat) with the air emissions from the belt drier.
					  ◦ Hot air (excess heat) from the belt drier.
					• All processing activities shall be undertaken inside the proposed Briquette Plant building.
					• Traffic at the site will be on gravel access tracks. Watering of the unsealed surfaces shall be undertaken as required to minimise fugitive dust emissions from the site.
					• The proposed Briquette Plant is not anticipated to cause air quality impacts at sensitive receptors.

	Odour emissions from the storage of stockpiled woodchip and processing operations causes nuisance at sensitive receptors.	Unlikely	Insignificant	Low	• All processing activities shall be undertaken inside the proposed Briquette Plant building. • Processing of the woodchip through the proposed Briquette Plant will be at a rate of 16m^3/h. Therefore, the maximum time that woodchip would be stored in the designated bunker before being processed is approximately four (4) days. Odorous conditions are

Environmental Value	Potential Impact	Likelihood	Consequence	Risk	Comment
					therefore unlikely to be generated from the storage of woodchip at the site due to the proposed indoor storage and short storage period. • No odorous emissions will be released from the boiler or the belt drier exhaust stack above the roofline (i.e., only hot air). • The proposed Briquette Plant is not anticipated to cause odour nuisance at sensitive receptors.

	GHG emissions are released to the atmosphere as a direct result of the operation of the proposed Briquette Plant (i.e., Scope 1 under the DETSI's GHG Guideline) that significantly contribute to climate change.	Unlikely	Insignificant	Low	The following information was collated to respond to Table 3 of the DETSI's Greenhouse gas emissions Guideline (2024) regarding the application requirements for low emitters (i.e., generate <25,000t of CO_2-e per year):
					• Qualitative comparison of the proposed operation with a typically larger emitter to demonstrate categorisation as a 'low emitter' (i.e., < 25,000 tonnes CO2-e per year):
					  • As outlined at Table 4, the proposed operation would not actually include timber milling and woodchipping at the site and would only process approximately **12,000t of woodchip per year** to produce an output of approximately 6,000t of briquette per year. Appendix 2 of the DETSI's Emission scores profile for environmentally relevant activities (2024) does not list 'Greenhouse Levels' for ERA 47 (b) as a contaminant to be considered when determining an emissions score for ERA 47 (b).
					  • Comparatively, Appendix 2 of the DETSI's Emission scores profile for environmentally relevant activities (2024) does not list 'Greenhouse Levels' until the threshold of ERA

Environmental Value	Potential Impact	Likelihood	Consequence	Risk	Comment
					47 (c), which includes sawmilling **20,000t to 100,000t/yr.** • The throughput of the proposed operation is at least 40% less than ERA 47 (c) where GHG emissions are considered to be a risk for determining an emissions score. • The following mitigation measures shall be implemented to minimise GHG emissions and improve future GHG emissions: • GHG emissions shall adhere to the DETSI's GHG abatement hierarchy as far as reasonably practicable. • Reduce vehicle idling time. • Optimise and schedule vehicle operations to reduce fuel consumption. • Minimise transportation distances and optimise supply chains to reduce fuel consumption where reasonably practicable. • Maintain plant and equipment in accordance with the manufacturer's recommendations. • Consider GHG emissions when purchasing new plant and equipment.
Biodiversity	Clearing of protected vegetation communities (Regional Ecosystems or TECs).	Rare	Insignificant	Low	• The site and surrounds have been heavily disturbed. • The site does not contain Regional Ecosystems or TECs. • The proposed Briquette Plant will not impact protected vegetation communities.

Environmental Value	Potential Impact	Likelihood	Consequence	Risk	Comment
	Harm to threatened flora and fauna species and their habitat.	Rare	Insignificant	Low	• Threatened flora and fauna were not observed at the highly disturbed site and are unlikely to occur based on available habitat resources and ongoing disturbance and routine maintenance of the site. • The proposed Briquette Plant will not impact threatened flora or fauna or their habitat.
	Introduction or spread of weeds, pests (rodents) and vectors (mosquitoes).	Unlikely	Minor	Low	• Weeds and pests (rodents, cockroaches, etc.) shall be managed as part of routine site maintenance (as per the SBMP). • The proposed Briquette Plant is not anticipated to present a significant risk with regards to the proliferation of weeds, pests (rodents) or vectors (mosquitoes).
	Harm to the ecological values and functions of waterways or wetlands.	Rare	Insignificant	Low	• The site and surrounds have been heavily disturbed. • The site does not contain or immediately adjoin any waterways or wetlands. Dingo Creek is located approximately 150 m from the site. • All processing activities shall be undertaken inside the proposed Briquette Plant building on sealed concrete hardstand. • The proposed Briquette Plant will not impact the ecological values or functions of any waterways or wetlands in the local area.
	Adverse impacts to areas of environmental significance, landscape connectivity or protected areas.	Rare	Insignificant	Low	• The site and surrounds have been heavily disturbed. • The site does not provide important habitat or landscape connectivity value for local fauna. • The proposed Briquette Plant will not impact on landscape ecological values or connectivity.

Environmental Value	Potential Impact	Likelihood	Consequence	Risk	Comment
	Adverse impacts on PEM (MSES or MNES) at the site.	Rare	Insignificant	Low	• The site and surrounds have been heavily disturbed. • No PEM (MSES or MNES) occur at or immediately adjoin the site. • The proposed Briquette Plant will not have a significant residual impact on PEM (MSES or MNES) and will therefore not require environmental offsets or referral under the EPBC Act.
Visual Amenity	Infrastructure associated with the proposed Briquette Plant and its operations reduces the visual amenity of the site.	Rare	Insignificant	Low	• The site is zoned as Medium Impact Industry and is within an industrial area. It is heavily disturbed and currently used for the storage of timber. • The appearance of the proposed Briquette Plant will be consistent with nearby industrial land uses. • All processing activities shall be undertaken inside the proposed Briquette Plant building. • No significant impacts to visual amenity of the local area are anticipated from infrastructure and operations associated with the proposed Briquette Plant.
Cultural Heritage	The proposed Briquette Plant adversely impacts the cultural heritage values of the site.	Rare	Insignificant	Low	• There are no recorded cultural heritage values at the site (Section 5.6). • No significant impacts to cultural heritage values are anticipated from the operation of the proposed Briquette Plant.

8 Summary

Parkside Building Supplies Pty. Ltd. are proposing to construct and operate a Briquette Plant at their existing manufacturing site located at 2-30 Kemp Street, Wondai (formally described as Lot 106 SP331010). The operation of the proposed Briquette Plant will require approval for ERA 47 (b) Timber milling and woodchipping – milling, in a year, more than 10,000t but not more than 20,000t of timber.

The qualitative environmental impact risk assessment demonstrated that there was a low risk to environmental values by the operation of the proposed Briquette Plant at the site. The assessment confirmed that there are no anticipated significant residual impacts to Prescribed Environmental Matters and therefore no environmental offsets are required.

Implementation of Range Environmental's SBMP (Reference: J002200) will maintain the low risk of harm to environmental values during operations.

9 References

ASK Consulting Engineers. 2011. Noise Reduction through Facades with Open Windows, Paper Number 37.

ATC Engineers and Project Managers. 2025. Preliminary Stormwater Management Report.

Bureau of Meteorology (BoM). 2024. Kingaroy Airport (station no. 040922) Annual Wind Rose.

Bureau of Rural Sciences. 2009. Digital Atlas of Australian Soils. Bioregional Assessment Source Dataset.

Department of Environmental and Science (DES). 2020. Noise Measurement Manual.

Environment Protection Authority (EPA) South Australia. 2023. Evaluation distances for effective air quality and noise management.

Environmental Protection Agency. 2004. Planning for Noise Control Guideline. State of Queensland. Brisbane, Queensland.

Appendices

Appendix A Code Response Tables

Table 8 SDAP State Code 22: Environmentally Relevant Activities (v3.2)

Performance outcomes	Acceptable outcomes	Response
All ERAs		
PO1 Development is suitably located and designed to avoid or mitigate environmental harm to the acoustic environment.	AO1.1 Development meets the acoustic quality objectives for sensitive receptors identified in the Environmental Protection (Noise) Policy 2019.	Complies with PO1 as no significant impacts to amenity in relation to noise emissions are anticipated because: • The site is located within an industrial area. Nearby land uses include a transport depot, other manufacturing facilities, roads, and retail premises. • The nearest noise sensitive receptors to the site are shown in Figure 9. The closest noise sensitive receptor to the site is located approximately 193m west. • Primary noise sources at the proposed Briquette Plant will be mechanical plant and equipment. An estimated noise level of 95 dB(A) indoors for the Briquette Plant was calculated from information provided by Recycling Technologies Group. The dominant noise source will be the hammer mill, which will be attenuated by approximately 15 dB by a cabin. • A distance attenuation calculation was undertaken based on the general rule that noise will decrease by 6 dB with a doubling of distance from a point source (DES, 2020). Based on an estimated noise level of 95 dB(A) at the façade of the proposed Briquette Plant building and a distance of 193 m (Figure 9), the calculated noise level at the nearest noise sensitive receptor (commercial premise) was 49 dB(A)[4]. This complies with the commercial (indoor) Acoustic Quality Objectives (AQOs) of 52 dB[5] provided at Schedule 1 of the

[4] Attenuation from 1m (façade of proposed briquette facility) to 193m (façade of nearest noise sensitive receptor) = 45.6 dB total attenuation (rounded to 46 dB (nearest whole number) for comparison with the noise assessment criteria) (DES, 2020). 95 dB – 46 dB = 49 dB.

[5] Assuming a 7 dB(A) correction to account for the façade attenuation provided by a normal, naturally ventilated building with opened windows (ASK Consulting Engineers, 2011 & EPA, 2004).

Performance outcomes	Acceptable outcomes	Response
		Environmental Protection (Noise) Policy 2019 (EPP Noise) when the commercial premises is open for business. • The SBMP outlines measures that shall be taken to reduce noise emissions from the operation of the Briquette Plant at the site. • No significant impacts to amenity in relation to noise emissions from the proposed Briquette Plant are anticipated.

PO2 Development is suitably located and designed to avoid or mitigate environmental harm to the air environment.	AO2.1 Development meets the air quality objectives of the Environmental Protection (Air) Policy 2019.	Complies with PO2 as no significant impacts to air quality are anticipated because:
		• The nearest air quality sensitive receptors to the site are shown in Figure 9. The closest air quality sensitive receptor to the site is located approximately 152m west.
		• Ash generated from the boilers will be collected in containers attached to each boiler (Appendix C) and shall be collected by a regulated waste contractor as required.
		• Air emissions from the proposed Briquette Plant will be released via one (1) exhaust stack above the roofline of the belt drier fans. The air emissions will be a combination of the following sources, which are not listed pollutants under the Environmental Protection (Air) Policy 2019:
		  • Flue gases from the boiler, which are generated from burning woodchip blended with green sawdust, will be filtered to remove pollutants (e.g., carbon monoxide, nitrogen oxides, sulphur oxides, volatile organic compounds and particulate matter). The filtered flue gas will then be piped directly to the belt drier where it will be emitted as 'hot air (excess heat) with the air emissions from the belt drier.
		  • Hot air (excess heat) from the belt drier.
		• All processing activities shall be undertaken inside the proposed Briquette Plant building.

Performance outcomes	Acceptable outcomes	Response
		• Traffic at the site will be on gravel access tracks. Watering of the unsealed surfaces shall be undertaken as required to minimise fugitive dust emissions from the site. • The proposed Briquette Plant is not anticipated to cause air quality impacts at sensitive receptors.
PO3 Development (other than intensive animal industry for poultry farming), is suitably located and designed to avoid or mitigate environmental harm on adjacent sensitive land uses caused by odour.	No acceptable outcome is prescribed.	Complies with PO3 as no significant impacts to amenity in relation to odour emissions are anticipated because: • All processing activities shall be undertaken inside the proposed Briquette Plant building. • Processing of the woodchip through the proposed Briquette Plant will be at a rate of 16m^3/h. Therefore, the maximum time that woodchip would be stored in the designated bunker before being processed is approximately four (4) days. Odorous conditions are therefore unlikely to be generated from the storage of woodchip at the site due to the proposed indoor storage and short storage period. • No odorous emissions will be released from the boiler or the belt drier exhaust stack above the roofline (i.e., only hot air). • The proposed Briquette Plant is not anticipated to cause odour nuisance at sensitive receptors.
PO4 Development is suitably located and designed to avoid or mitigate environmental harm to the receiving waters environment.	AO4.1 Development meets the management intent, water quality guidelines and objectives of the Environmental Protection (Water and Wetland Biodiversity) Policy 2019.	Complies with PO4 as no harm to the receiving waters environment is anticipated because: • Groundwater is deep (at least 33.5m) and at a low risk of impact. • Dingo Creek is located approximately 150 m from the site. • Wastes shall be stored to prevent exposure to rainfall or stormwater or leakage to the environment. • All processing activities shall be undertaken inside the proposed Briquette Plant building.

Performance outcomes	Acceptable outcomes	Response
		• The site shall maintain the existing point of discharge along the eastern boundary. • A bioretention trench shall be constructed along the eastern boundary of the site to collect stormwater runoff prior to leaving the site to filter out sediment and attenuate peak flows. • All buildings at the site shall be connected to attenuation tanks that connect to the downpipes of the buildings and discharge at a low flow to the bioretention trench. • The proposed Briquette Plant is not anticipated to present a significant contamination risk to waters with the implementation of the SBMP and the Preliminary Stormwater Management Report. • The proposed Briquette Plant will meet the requirements of the EPP (Water and Wetland Biodiversity) 2019.
PO5 Development is designed to include elements which: 1. prevent or minimise the production of hazardous contaminants and waste as by-products; or 2. contain and treat hazardous contaminants on-site rather than releasing them into the environment; and 3. provide secondary containment to prevent the accidental release of hazardous contaminants to the environment from spillage or leaks.	No acceptable outcome is prescribed.	Complies with PO5 as no harm to the receiving environment is anticipated because: • There will be no storage or use of chemicals at the proposed Briquette Plant. • No hazardous wastes are expected to be generated from the proposed Briquette Plant operations. • Ash generated from the operation of the boilers shall be collected in containers attached to each boiler (Appendix C) and disposed of offsite by a regulated waste contractor as required. The relevant EOW approvals shall be sought by the applicant prior to reusing ash as a saleable product. • Minor quantities of regulated wastes (e.g., oils/filters, etc.) generated from on-site maintenance activities shall be removed from site regularly by a licensed regulated waste contractor.

Performance outcomes	Acceptable outcomes	Response
		• Wastes shall be stored to prevent exposure to rainfall or stormwater or leakage to the environment. • No onsite disposal of wastes shall be permitted.
PO6 Environmentally hazardous materials located on-site are stored to avoid or minimise their release into the environment due to inundation during flood events.	No acceptable outcome is prescribed.	Complies with PO6 as no hazardous materials will be released during a flood event because: • The north-eastern portion of the site is mapped in a Flood Hazard Area under the Flood Hazard Overlay of the South Burnett Planning Scheme 2017 (Version 2.0) (Figure 7). • There will be no storage or use of chemicals at the proposed Briquette Plant. • Wastes shall be stored to prevent exposure to rainfall or stormwater or leakage to the environment. • No onsite disposal of wastes shall be permitted. • The SBMP outlines measures that shall be implemented during operations to minimise the risk of hazardous materials being released during a flood event at the site. • The proposed Briquette Plant will not present a significant water contamination risk from hazardous materials during flood events.
All development – matters of state environmental significance		
PO7 Development is designed and sited to: 1. avoid impacts on matters of state environmental significance; or 2. minimise and mitigate impacts on matters of state environmental significance after demonstrating avoidance is not reasonably possible; and 3. provide an offset if, after demonstrating all reasonable avoidance, minimisation and mitigation measures are undertaken, the	No acceptable outcome is prescribed.	The proposed development complies with PO7 because: • The site and surrounds have been heavily disturbed. • No PEM (MSES) occur at or immediately adjoin the site. • The proposed Briquette Plant avoids PEM (MSES) and will not have a significant residual impact on PEM (MSES).

Performance outcomes	Acceptable outcomes	Response
development results in an acceptable significant residual impact on a matter of state environmental significance.		
Intensive animal industry – poultry farming (ERA 4(2))		
PO8 Poultry farming development (where farming more than 200,000 birds) is suitably located and designed to avoid or mitigate environmental harm on adjacent sensitive land uses, caused by odour.	AO8.1 For poultry farming involving 300,000 birds or less, development meets the separation distances as determined using the S-factor methodology to: 1. a sensitive land use in a rural zone; and 2. boundary of a non-rural zone. OR AO8.2 Development meets the separation distances as determined by odour modelling using the following criteria: 1. 2.5 odour units, 99.5 percent, 1 hour average for a sensitive land use in a rural zone; or 2. 1.0 odour units, 99.5 percent, 1 hour average for the boundary of a non-rural zone.	Not applicable – the application is not for ERA 4(2).

Table 9 Medium Impact Industry Zone Code (South Burnett Planning Scheme 2017 (v2.0))

Performance outcomes	Requirements for accepted development and assessment benchmarks	Response
Section 1: General		
PO8 Development minimises disturbance to the geotechnical, hydrological, and environmental characteristics of the site and its setting.	**AO8.1** Development is located on land with less than 10% slope. and **AO8.2** Development occurs in areas outside of stormwater discharge points, overland flow paths and natural drainage features. and **AO8.3** Stormwater is directed away from areas of potential contamination. and **AO8.4** Areas where potentially contaminating substances are stored or used are covered and bunded. and **AO8.5** Provision is made for spills to be controlled on-site for removal and disposal by an approved means. and **AO8.6** Liquid or solid wastes are not discharged directly to land or waters.	The proposed Briquette Plant complies with PO8 because: • No watercourses occur at the site. Dingo Creek is located approximately 150 m east of the site (Figure 6). • All processing activities shall be undertaken inside the proposed Briquette Plant building. • There will be no storage or use of chemicals at the proposed Briquette Plant. • Any spills/leaks from plant or equipment shall be cleaned up immediately using spill kits located onsite. • Wastes shall be stored to prevent exposure to rainfall or stormwater or leakage to the environment. • No onsite disposal of wastes shall be permitted.
PO10 Development is located and designed to ensure that land uses are not exposed to: (a) Areas that pose a health risk from previous activities; and (b) Unacceptable levels of contaminants.	**AO10.1** Development does not occur: (a) In areas that pose a health risk from previous activities; and (b) On sites listed on the Contaminated Land Register or Environmental Management Register. or	The proposed Briquette Plant complies with PO10 because: • The site is not included on the EMR or the CLR (Appendix E). • The site was not recorded on the Department of Defence's Unexploded Ordnance (UXO) database (Appendix E).

Performance outcomes	Requirements for accepted development and assessment benchmarks	Response
	AO10.2 Areas that pose a health risk from previous activities and contaminated soils which are subject to development are remediated prior to plan sealing, operational works permit, or issuing of building works permit.	• No known contaminating activities that may pose a health risk to the future proposed use of the proposed Briquette Plant were known to have occurred at the site.
Section 4: For development affected by one or more overlays (other than bushfire hazard overlay)		
Flood hazard overlay		
PO20 Development is not exposed to risk from flood events by responding to flood potential and maintains personal safety at all times.	**AO20.1** (a) All new allotments include an area of sufficient size to accommodate the intended land use outside the area identified on Overlay Map 03. and (b) New buildings are not located within the area identified on Overlay Map 03. or **AO20.2** (a) Development is sited above the 1% AEP flood event where known, or the highest known flood event, as follows: (i) Habitable floor levels - 500mm; (ii) Non-habitable floor levels - 300mm; (iii) On-site sewage treatment and storage areas for potential contaminants - 300mm; (iv) All other development - 0mm. and (b) Signage is provided on site indicating the position and path of all safe evacuation routes off the site.	The proposed Briquette Plant complies with PO20 because: • The north-eastern portion of the site is mapped in a Flood Hazard Area under the Flood Hazard Overlay of the South Burnett Planning Scheme 2017 (Version 2.0) (Figure 7). • All roof gutters shall be adequately sized for a 1% AEP storm event. • As per the requirements of ATC Engineers' (2025) Preliminary Stormwater Management Report, the finished floor level of the Briquette Plant shall be a minimum of 300mm, but preferably 500mm, above the table drain on Kemp Street, and a minimum 300mm above design flood levels.

Performance outcomes	Requirements for accepted development and assessment benchmarks	Response
PO22 Development avoids the release of hazardous materials into floodwaters.	**AO22.1** Materials manufactured or stored on site are not hazardous in nature. or **AO22.2** Hazardous materials and any associated manufacturing equipment are located above the nominated flood level.	The proposed Briquette Plant complies with PO22 because: • The north-eastern portion of the site is mapped in a Flood Hazard Area under the Flood Hazard Overlay of the South Burnett Planning Scheme 2017 (Version 2.0) (Figure 7). • There will be no storage or use of chemicals at the proposed Briquette Plant. • All processing activities shall be undertaken inside the proposed Briquette Plant building. No manufacture of hazardous materials will occur. • Wastes shall be stored to prevent exposure to rainfall or stormwater or leakage to the environment. • No onsite disposal of wastes shall be permitted. • The SBMP outlines measures that shall be implemented during operations to minimise the risk of hazardous materials being released during a flood event at the site. • The proposed Briquette Plant is not anticipated to present a significant water contamination risk from hazardous materials during flood events.

Table 10 Bushfire hazard overlay code (South Burnett Planning Scheme 2017 (v2.0))

Performance outcomes	Acceptable outcomes	Response
Section E: Material change of use		
PO10 Site layout achieve an acceptable or tolerable risk to people. Landscape or open space provided as part of the development: (a) acts as a buffer between hazardous vegetation and development; and (b) does not create additional bushfire prone areas.	**AO10.1** Site layout places the landscape and open spaces within the site between premises and adjacent mapped medium, high or very high potential bushfire intensity areas. **AO10.2** This landscaping and open space comprises protective landscape treatments that: (a) comprise only low threat vegetation, including grassland managed in a minimal fuel condition, maintained lawns, golf courses and cultivated gardens; or (b) are designed to ensure a potential available fuel load is maintained at less than 8 tonnes/hectare in aggregate and that fuel structure remains discontinuous.	The proposed Briquette Plant complies with PO10 because: • No infrastructure will be constructed along the eastern boundary of the site, proximate to hazardous vegetation. • Open space between proposed infrastructure and hazardous vegetation adjacent to the site will comprise maintained grassy groundcover. No additional vegetation will be established between proposed infrastructure and hazardous vegetation which could create additional bushfire prone areas.

Appendix B Development Plans

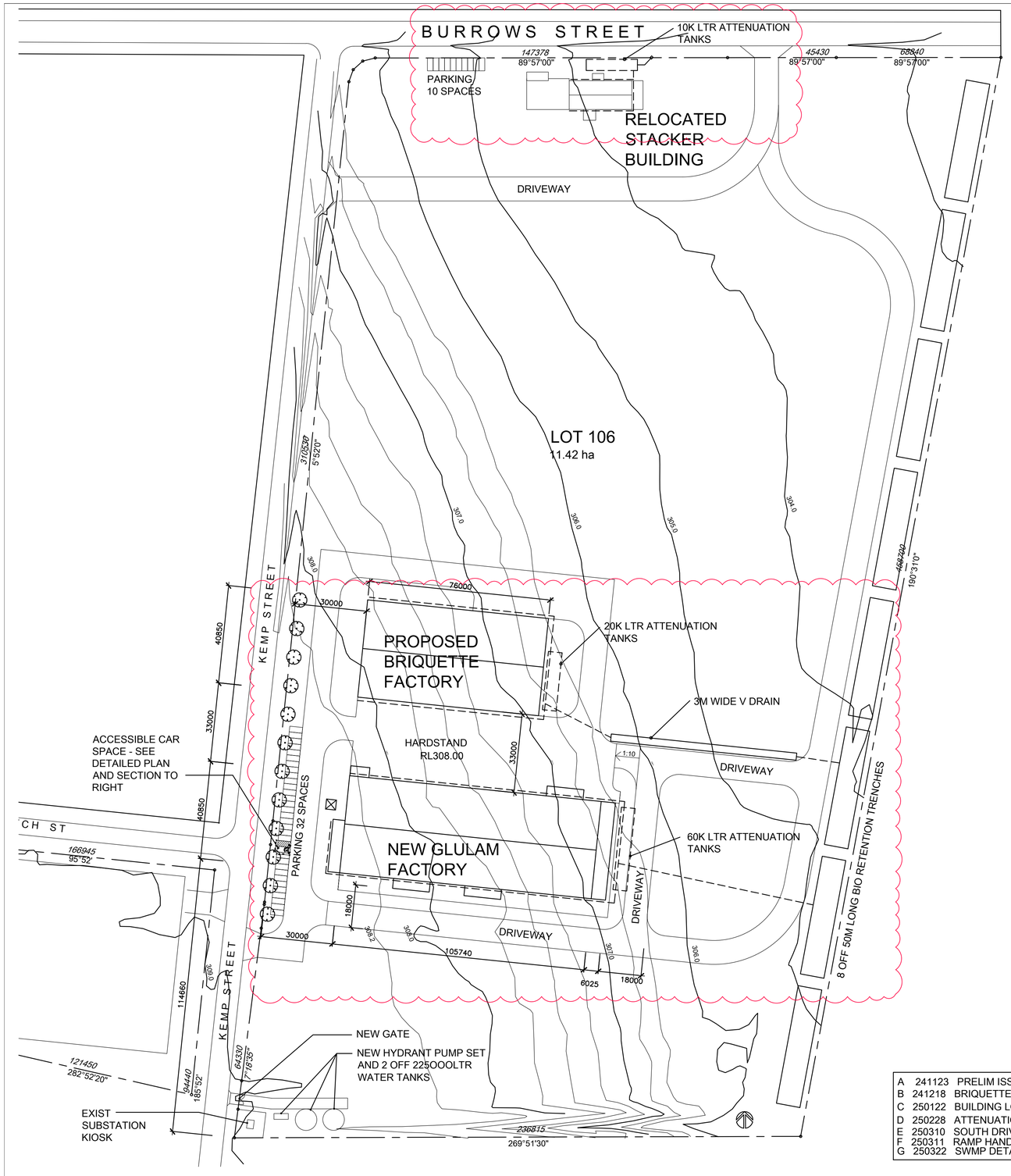

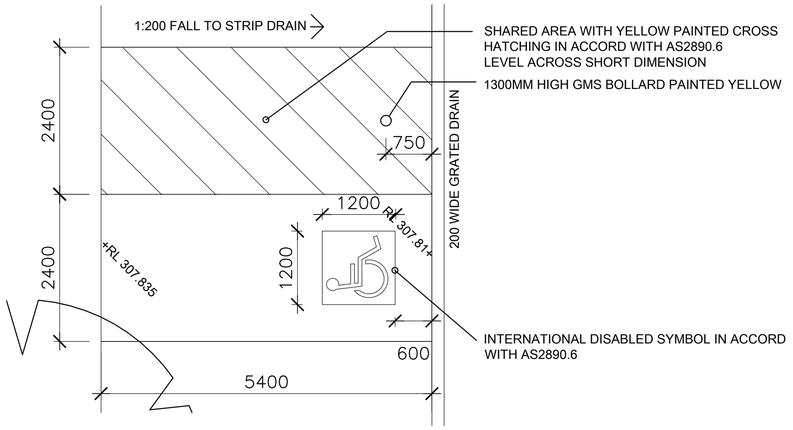

ACCESSIBLE CAR SPACE PLAN 1:50

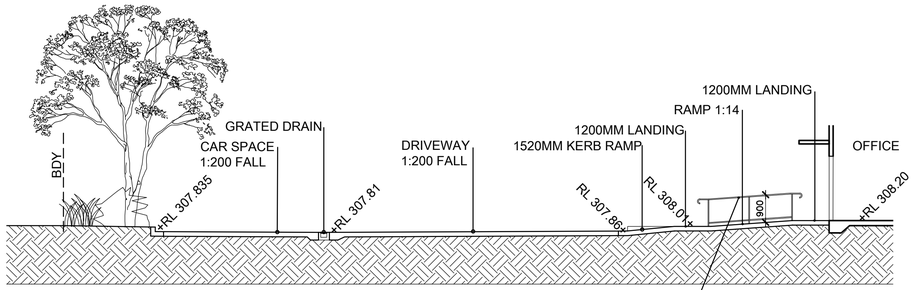

PATH FROM ACCESSIBLE CAR SPACE
TO ENTRY - LONG SECTION 1:100

LOCATION MAP

A	241123	PRELIM ISSUE
B	241218	BRIQUETTE BLDG ADDED
C	250122	BUILDING LOCATIONS ADJUSTED
D	250228	ATTENUATION TANKS ADDED, EAST ROAD SHIFTED
E	250310	SOUTH DRIVEWAY MOVED, ACCESSIBLE CARSPACE DOCUMENTED
F	250311	RAMP HANDRAILS ADDED
G	250322	SWMP DETAILS ADDED

New Glulam Factory and Offices

2-30 Kemp Street WONDAI QLD 4606

for PARKSIDE GROUP - TIMBER DIVISION

Job No 2024-03

SITE PLAN

DA01

250322 Rev G

November 2024

0 50 100 150

SCALE 1:1000 @ A1

SWELL ARCHITECTS
A: 12 Balkin Road Eumundi QLD 4562
M: 0414 574 555
E: matt@swellarchitects.com
R: Nominated Architect QLD No 4747

A	250117	PRELIM ISSUE
B	250131	BUILDING MOVED 2400 EAST
C	250204	GLULAM BLDG MOVED 10M SOUTH
D	250212	DOORS AND EXIT PATHS SHOWN
E	250328	MCU SUBMISSION, INDICATIVE EARTHWORK ADDED

A B C D E F G H I J K

BANK

30000 | 7500 | 7500 | 7500 | 7500 | 7500 | 75750 | 7500 | 7500 | 7500 | 7500 | 7500

1 2 3 4 5 6

8000 | 8000 | 8000 | 8000 | 8000 | 8000

40981

FIRE ENGINE ACCESS
RL 308.00

GRASS

GRASS

BOILER FUEL BIN

EXIT
FHR
ROLLER SHUTTER
EXIT WAY 1350 WIDE

DRYER

BOILERS X 3
RL 308.20
EXIT WAY 1200 WIDE

TEMPORARY STORAGE

MCC ROOM

EXHAUST
EXIT WAY 1350 WIDE
EXIT WAY 1000 WIDE

SAWDUST/CHIP BUNKER
RL 308.05

GRASS

FIRE ENGINE ACCESS
RL 308.00

2M WIDE LANDSCAPING

PELLET BAGGER

BRIQUETTE BAGGER

RL 308.20

PELLET PRESS

BRIQUETTE PRESS

BRIQUETTE PRESS

CHIP RAKE

EXIT WAY 1350 WIDE
FHR
ROLLER SHUTTER
EXIT

SAWDUST SILO

SAWDUST SILO

STORMWATER DRAIN

BUILDING FACE

21526

19302

CONCRETE HARDSTAND

18203

GRASS

DRIVEWAY

FIRE ENGINE ACCESS
RL 308.00

RL 308.00

CONCRETE HARDSTAND

SILO ON STAND

DUST EXTRACTION

CANOPY OVER
RAMP UP 1:20
ROLLER SHUTTER
DP
EXIT

APPROVED GLULAM FACTORY

DRIVEWAY

1 2 3 4 5 6 7

1:10

New Briquette Factory

2-30 Kemp Street WONDAI QLD 4606

for PARKSIDE GROUP - TIMBER DIVISION

NOT FOR CONSTRUCTION

Job No 2025-01

MCU APPLICATION
FACTORY FLOOR PLAN

DA02

250328 Rev E

January 2025

SCALE 1:200 @ A1

SWELL ARCHITECTS

A: 12 Balkin Road Eumundi QLD 4562
M: 0414 574 555
E: matt@swellarchitects.com
R: Nominated Architect QLD No 4747

A	250123	PRELIM ISSUE
B	250212	CHIP BUNKER ROOF ADDED, GLULAM MOVED 10M SOUTH
C	250217	BOILER BUNKER ROOF ADDED
D	250326	MCU APPLICATION

A B C D E F G H I J K

7500 7500 7500 7500 7500 7500 7500 7500 7500 7500

75750

1 2 3 4 5 6

8025 7940 7940 7940 8025

40849

2 DA05

1 DA05

FALL 6° KLIPLOK PROFILE METAL ROOF SHEET

FALL 6° KLIPLOK PROFILE METAL ROOF SHEET

FALL 6° KLIPLOK PROFILE METAL ROOF SHEET

FALL 6°

TRIMDEK ROOF OVER CHIP BUNKER

DP

SILO

SILO

SILO ON STAND

WORKSHOP

DRIVEWAY

APPROVED GLULAM FACTORY

PARKING

New Briquette Factory

2-30 Kemp Street WONDAI QLD 4606

for PARKSIDE GROUP - TIMBER DIVISION

NOT FOR CONSTRUCTION

Job No 2025-01

MCU APPLICATION

ROOF PLAN

DA03

250328 Rev D

January 2025

SCALE 1:200 @ A1

0 10 20 30

SWELL ARCHITECTS

A: 12 Balkin Road Eumundi QLD 4562
M: 0414 574 555
E: matt@swellarchitects.com
R: Nominated Architect QLD No 4747

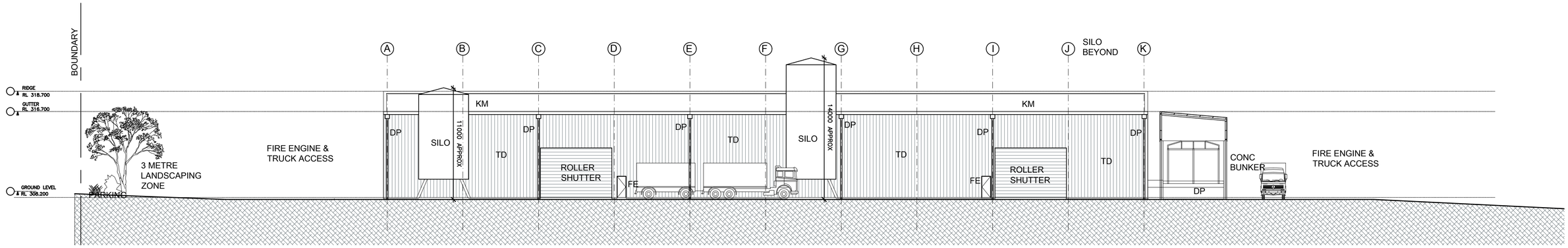

SOUTH ELEVATION

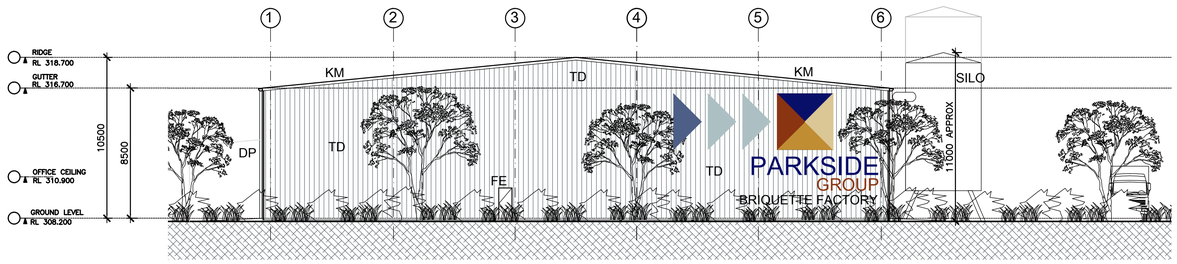

WEST ELEVATION

NOTE: WESTERN FACADE TO BE ENHANCED WITH POWDERCOAT ALUMINIUM PANELS UTILISING THE PARKSIDE CORPORATE COLOURS: BLUE, ORANGE AND YELLOW. COLOUR PANELS TO FUTURE DETAIL AS SHOWN ON SAMPLE BOARD TO BE PROVIDED

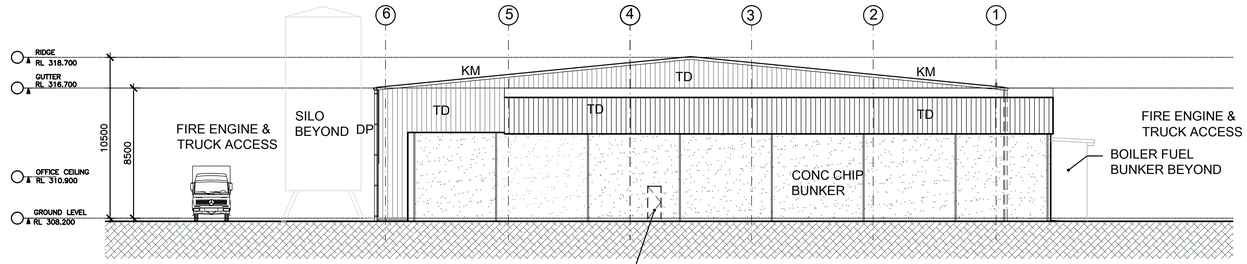

EAST ELEVATION

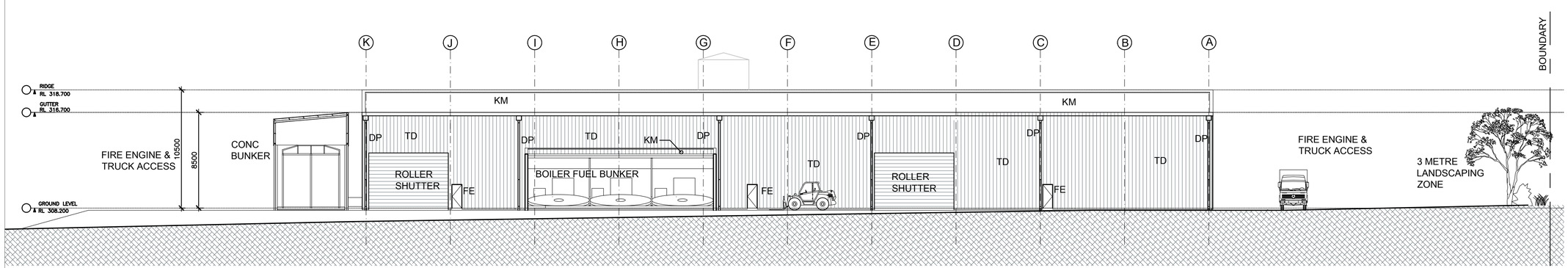

NORTH ELEVATION

MATERIALS LEGEND

TD	COLORBOND TRIMDEK WALL CLADDING
FE	FIRE EXIT DOOR
AW	ALUMINIUM SLIDING WINDOW
TW	TRANSLUCENT WALL SHEETING
FG	FIXED GLAZING
HD	SIDE HUNG GLASS DOOR
KM	COLORBOND KLIPLOK METAL DECK ROOFING
DP	COLORBOND DOWNPIPE (SUMP TO MAIN ROOF)
RS	ROLLER SHUTTER

New Briquette Factory

2-30 Kemp Street WONDAI QLD 4606

for PARKSIDE GROUP - TIMBER DIVISION

A	250212	PRELIM ISSUE
B	250214	SILO'S AND BOILER BUNKER AMENDED
C	250218	SILO HEIGHTS SHOWN
D	250304	SIGNAGE AMENDED
E	250328	MCU APPLICATION

NOT FOR CONSTRUCTION

Job No 2025-01

MCU APPLICATION ELEVATIONS

DA04

250328 Rev E

January 2025

0 10 20 30

SCALE 1:200 @ A1

SWELL ARCHITECTS

A: 12 Balkin Road Eumundi QLD 4562
M: 0414 574 555
E: matt@swellarchitects.com
R: Nominated Architect QLD No 4747

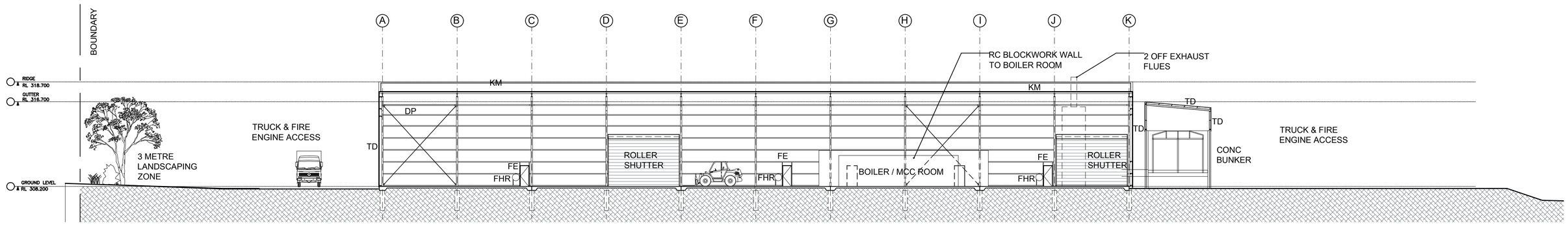

SECTION 1

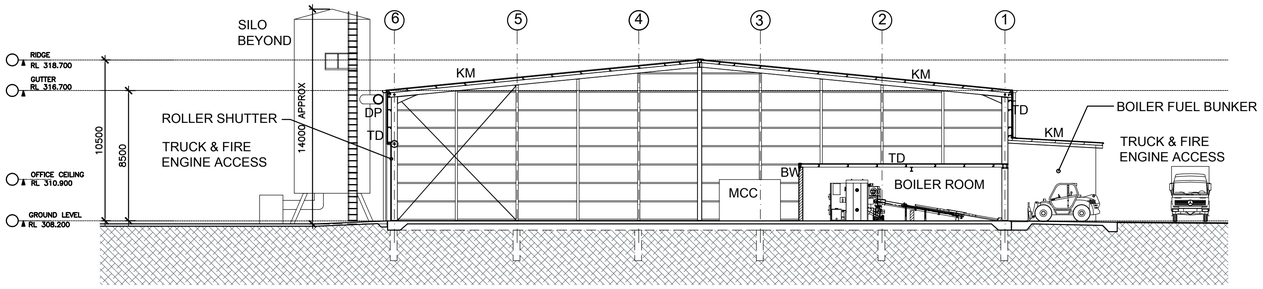

SECTION 2

MATERIALS LEGEND

TD	COLORBOND TRIMDEK WALL CLADDING
FE	FIRE EXIT DOOR
AW	ALUMINIUM SLIDING WINDOW
TW	TRANSLUCENT WALL SHEETING
FG	FIXED GLAZING
HD	SIDE HUNG GLASS DOOR
KM	COLORBOND KLIPLOK METAL DECK ROOFING
DP	COLORBOND DOWNPIPE (SUMP TO MAIN ROOF)
RS	ROLLER SHUTTER
BW	REINFORCED BLOCKWORK

NOTE: EQUIPMENT NOT SHOWN FOR CLARITY

New Briquette Factory

2-30 Kemp Street WONDAI QLD 4606

for PARKSIDE GROUP - TIMBER DIVISION

A	250213	PRELIM ISSUE
B	250214	BOILER ROOM AMENDED
C	250218	SILO HEIGHT SHOWN
D	250328	MCU SUBMISSION

NOT FOR CONSTRUCTION

MCU APPLICATION SECTIONS

Job No 2025-01

DA05

250328 Rev D

January 2025

0 10 20 30

SCALE 1:200 @ A1

SWELL ARCHITECTS

A: 12 Balkin Road Eumundi QLD 4562
M: 0414 574 555
E: matt@swellarchitects.com
R: Nominated Architect QLD No 4747

Appendix C Woodchip Boiler Specifications

T4e

WOOD CHIP BOILER

- Integrated particle separator (electrostatic precipitator) available as an option
- Online boiler control via app
- 7" touch display with LED status display

ENERGIE GENIE
ENERGIESPARMESSE 2018

PLUS X AWARD
honoured as:
BEST PRODUCT OF THE YEAR 2019

BETTER HEATING

INNOVATIVE AND CONVENIENT

fröling

ENVIRONMENTALLY RESPONSIBLE HEATING, ECONOMICALLY ATTRACTIVE

Wood chips are a local and environmentally-friendly fuel which is not subject to the crises and fluctuations of the market. Furthermore, wood chip production provides jobs for local residents.

That is why wood chip is the perfect fuel, not just from an economic perspective but also from an environmental point of view. The quality class is determined by the type of wood used.

For sixty years Froling has specialised in the efficient use of wood as a source of energy. Today the name Froling stands for modern biomass heating technology. Froling firewood, wood chip and pellet boilers are successfully in operation all over Europe. All of our products are manufactured in our factories in Austria and Germany. Froling's extensive service network ensures that we can handle all enquiries quickly.

GUARANTEED QUALITY AND RELIABILITY FROM AUSTRIA

- International pioneer in technology and design
- Sophisticated fully automatic operation
- Excellent environmental compatibility
- Environmentally responsible energy efficiency
- Renewable and CO_2-neutral fuel
- Ideal for all types of house
- Up to 5 year Froling-waranty (subject to warranty conditions)

User-friendly, compact, economical and safe:
The new T4e from Froling meets all your needs.

With the silicon carbide combustion chamber, the T4e ensures a **high level of efficiency** (up to 96.3%) with **very low emissions**. Well-planned use of energy-saving EC drives ensures **extremely low energy consumption**.

Thanks to its modular construction and compact dimensions, the Froling T4e is particularly easy to position and install. The entire boiler comes fully assembled, electrically wired and tested.

Particular attention was paid to energy efficiency, durability and stability during the development of the T4e. The T4e consumes very little electricity during operation, keeping the operating costs down. This priority was clearly confirmed when the boiler was awarded the EnergieGenie prize.

The **"EnergieGenie Innovation Prize"** of the Federal Ministry of Agriculture, Forestry, Environment and Water Management and the State of Upper Austria recognises new products according to the criteria of innovation, energy savings and the degree of innovation.

The **"Plus X Award"** honours high-quality innovations that make life simpler and more enjoyable while respecting the environment. Froling's T4e wood chip boiler stood out in the categories for **innovation, high quality, ease of use, functionality** and **ecology**.

T4e WOOD CHIP BOILER
SYSTEMATIC CONVENIENCE

Flue pipe also available with rear connection (optional)

Speed-controlled, highly efficient EC induced draught fan for lowest power consumption

Optional integrated particle separator (electrostatic precipitator)

Volume-optimised Ø 200 mm twin-chamber rotary valve for burn back protection

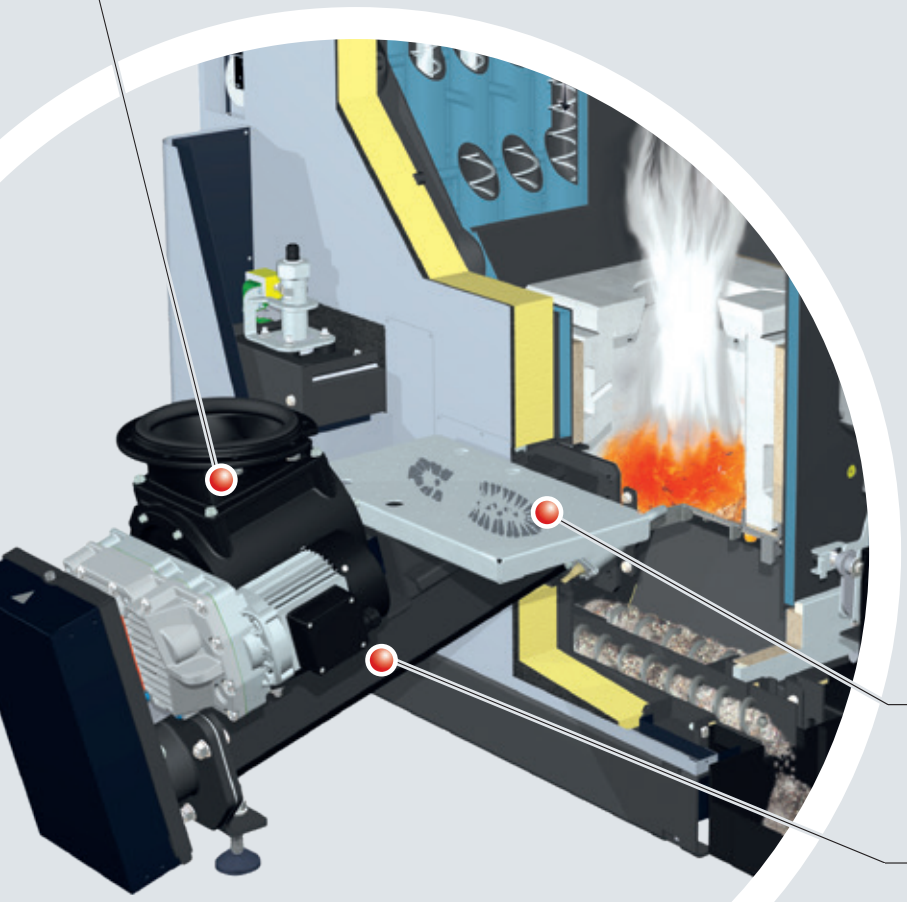

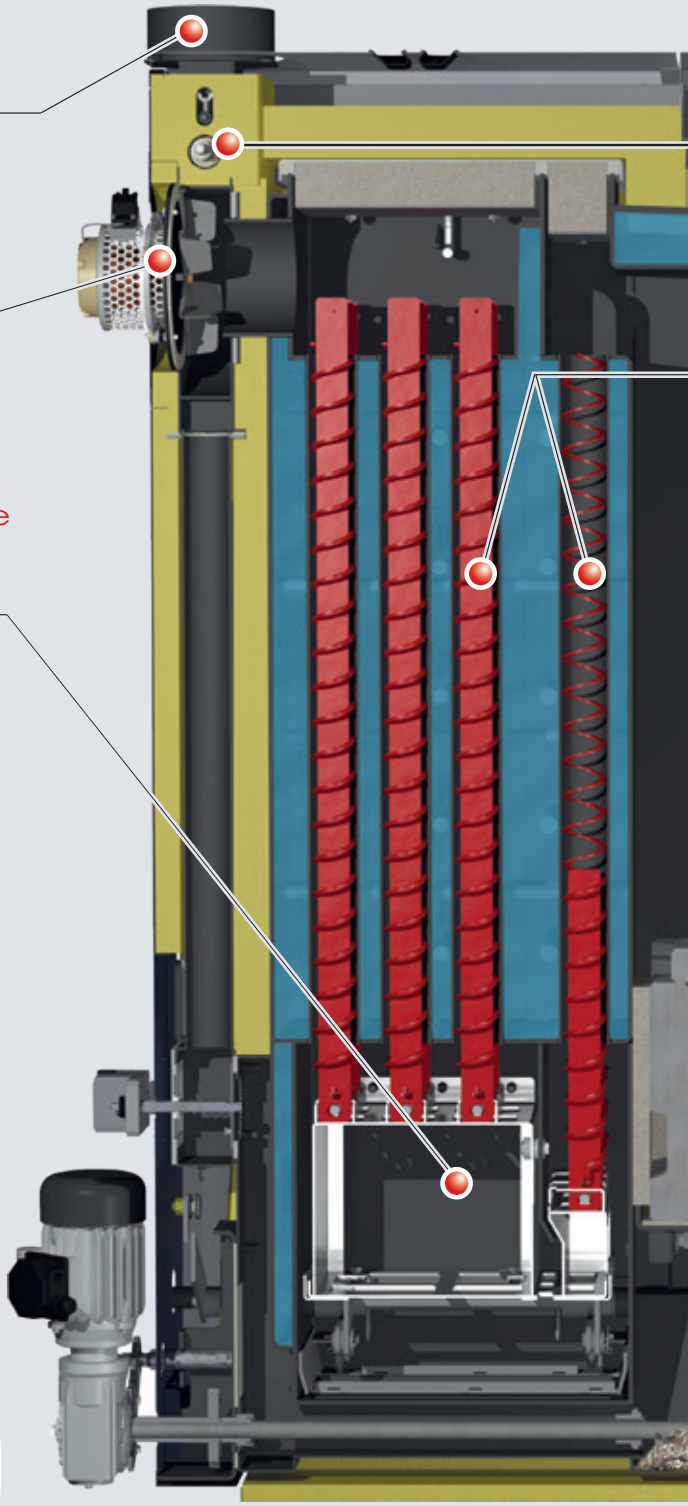

Sturdy foot step for easy maintenance and assembly

Stoker with large Ø100 mm screw and Ø150 mm screw from 200/250 kW

NEW!
7“ touch display with
LED status illumination

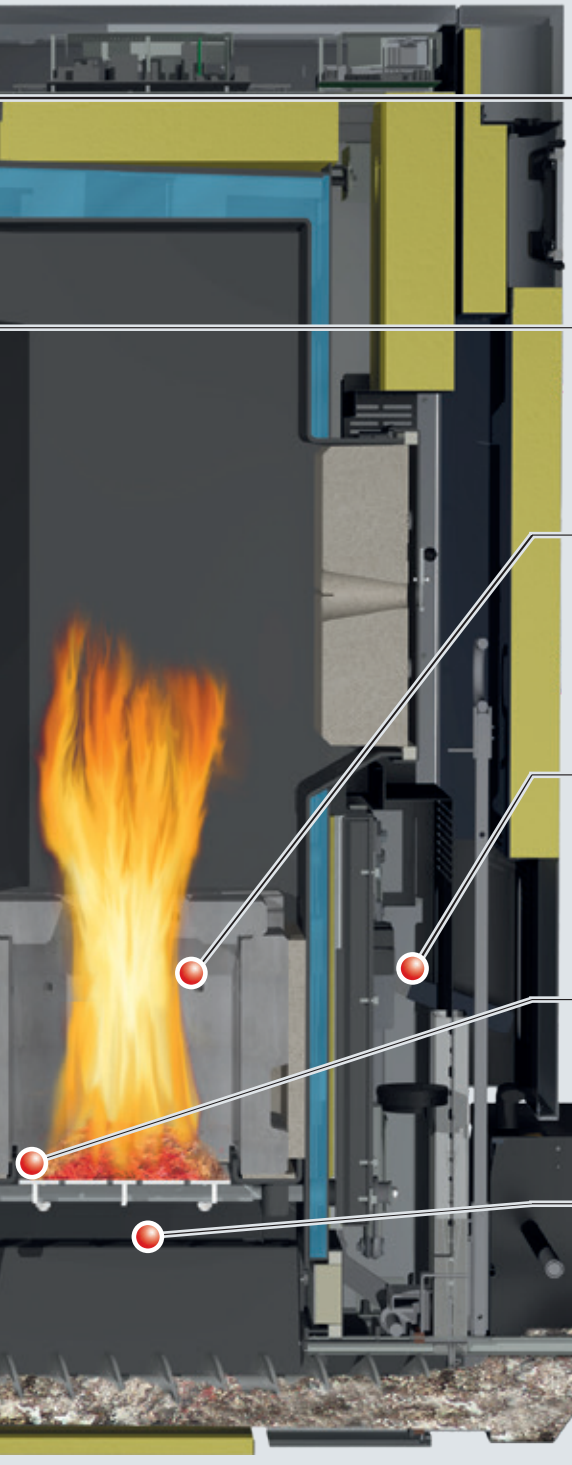

Lambda probe for optimum fuel adjustment

Fully automatic cleaning of all heat exchanger pipes (starting from the first pass) by means of turbulators (mechanical drive in the “cold” area)

Optimized silicon carbide combustion chamber for lowest emissions and a long service life

110° tipping grate with 900N drive for optimal grate cleaning

Silent, energy-efficient ceramic igniter with function monitor

Underpressure-controlled combustion with sensorless bed of embers monitor

Fully automatic ash removal with energysaving combi drive (common drive for heat exchanger and combustion chamber ash screw) to large-sized ash containers

FGR (flue gas recirculation) prepared in the boiler, motor and connecting pipe for activation available as an option

WELL PLANNED HOME
FOR MORE CONVENIENCE

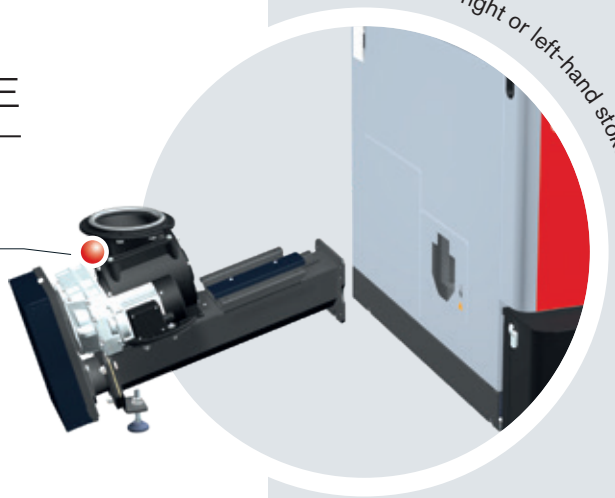

Easy to assemble on site

The T4e is supplied assembled and wired, you just need to fit the stoker unit and connect the chosen discharge system to the rotary valve. This saves time and money. Thanks to the well-planned layout of the units and its compact design, the T4e can also be used in very confined spaces.

Advantages:
- Quick installation
- Pre-wired
- Stoker unit can be ordered on the left or right as desired
- Return temperature control already integrated (ex works)

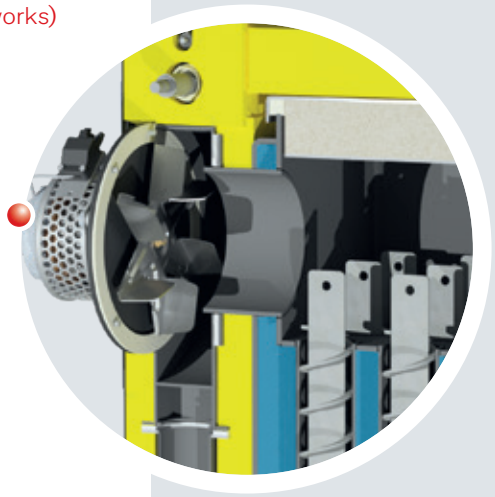

Speed regulated EC induced draught fan

The speed-regulated EC induced draught fan ensures the exact air quantity for combustion. As the induced draught fan is speed-regulated, it stabilises combustion throughout and adjusts the air quantity to the output of the respective material. Working together with the lambda control, it ensures optimum combustion conditions. The EC induced draught fan has a significantly higher efficiency than conventional induced draught fans with AC motors. This results in significant power savings, especially in partial load conditions.

Advantages:
- Maximum ease of use
- Continuous optimisation of combustion
- Up to 40% less power consumption

Precise primary and secondary air control

Combustion in the T4e is controlled by underpressure. Combined with the EC induced draught fan, this guarantees extremely high operating safety. The innovative control of air distribution in the combustion zone is a new feature. Primary and secondary air are optimally adjusted to the conditions in the combustion chamber with only one actuator. This, combined with the lambda controller which comes as standard, ensures that emissions are kept to a minimum.

Fast, energy-saving ignition

The silent ceramic igniter ensures safe and energy-saving ignition of the fuel. Thanks to the hot combustion zone, after short periods in idle mode the fuel is automatically reignited by the residual embers. It is only necessary to start the igniter after longer combustion pauses.

Advantages:
- Silent ceramic igniter for reliable ignition
- Automatic combustion of residual embers
- No separate blower fan required

Cleaning of all heat exchanger pipes

Heat exchanger with automatic cleaning (WOS) of all passes and lower drive

The WOS (Efficiency Optimisation System) consists of special turbulators, which are placed in the heat exchanger pipes **(NEW! Now from first pass)** and allow automatic cleaning of the heating surfaces. Clean heating surfaces ensure greater efficiency and thus fuel savings.

Advantages:
- Greater efficiency
- Fuel economy
- Drive mechanism in cold zone (low thermal load)

Permanently integrated return temperature control

The room temperature control integrated as standard avoids unnecessary radiant heat loss; this special feature guarantees maximum efficiency. An external return temperature control is therefore no longer necessary and saves installation time. The components are intelligently built-in and the main parts (e.g. pump) are visible from the outside and easily accessible.

Advantages:
- Minimum radiant heat loss
- Maximum efficiency
- No external return temperature control required
- Saves space in the boiler room

Balancing valve (optional)

Advantages:
- Can be retrofitted at any time
- Optimal hydraulic balancing of the heating system

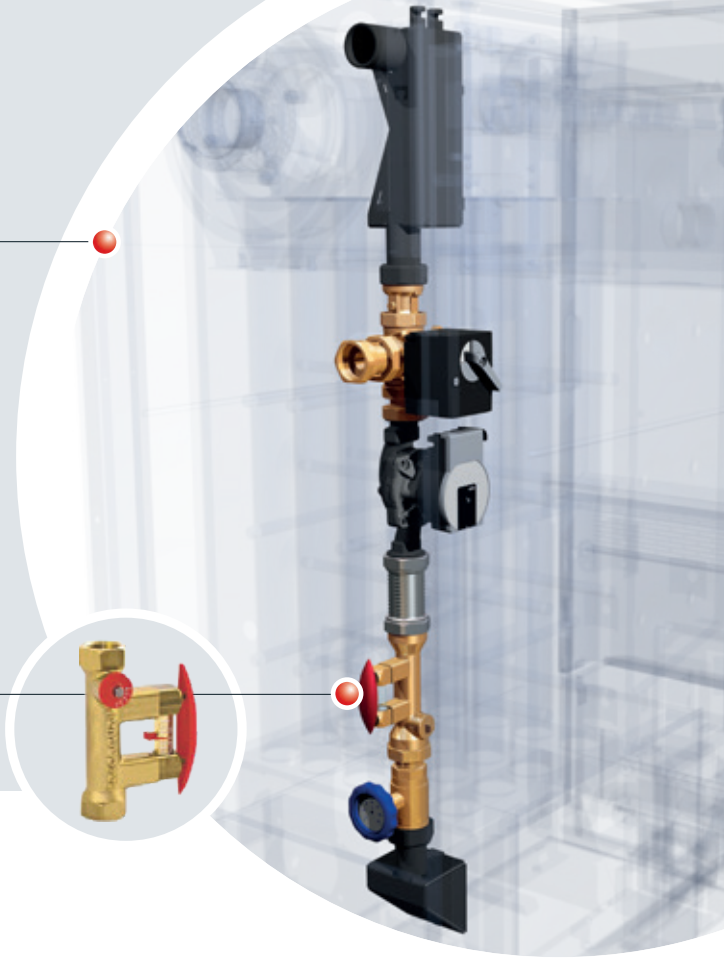

T4e

INTELLIGENT DESIGN DOWN TO THE LAST DETAIL

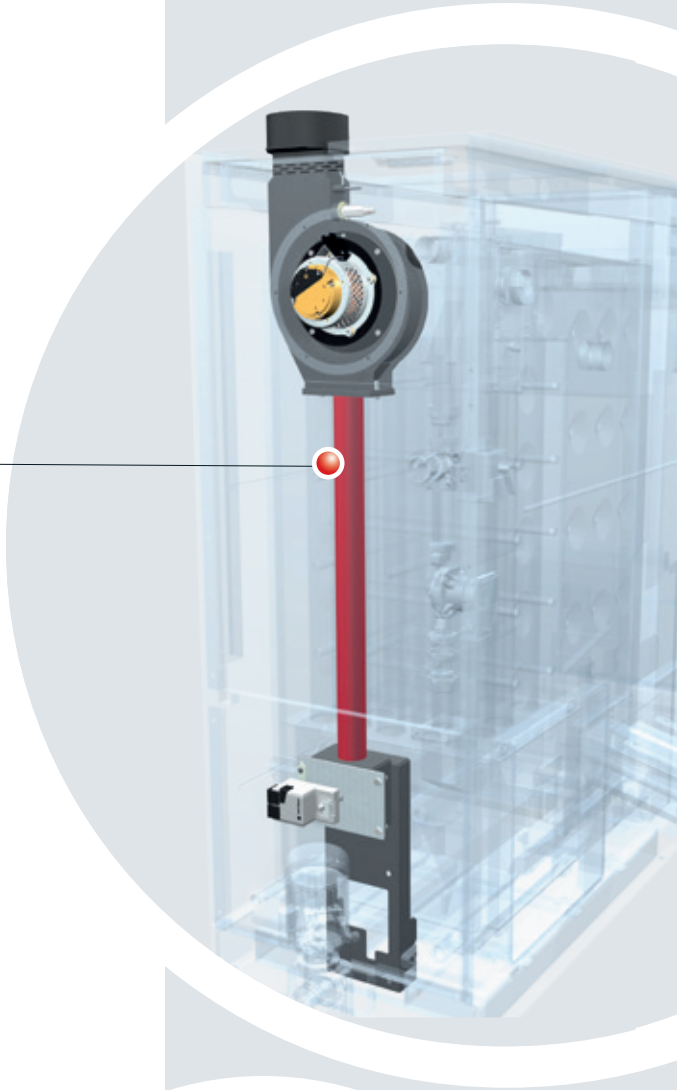

Flue gas recirculation (FGR) (optional)

The flue gas recirculation system (FGR) mixes part of the flue gas with the combustion air and returns it to the combustion zone.
The FGR optimises combustion and performance, and also reduces NOx emissions. The lower combustion temperatures offer added protection for flame-swept parts.

Advantages:
- Precise adjustment via air actuators
- Ideal combustion conditions
- Intelligent control of air quantity

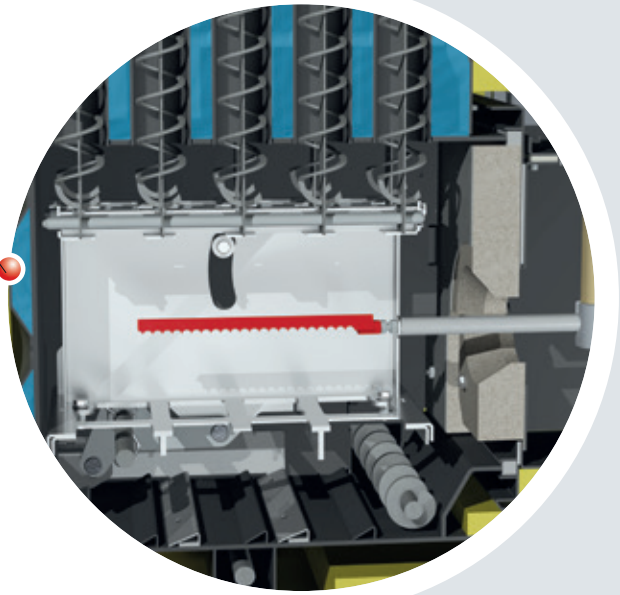

Optional integrated particle separator (electrostatic precipitator)

The optionally available particle separator (electrostatic precipitator) can be added at any time without additional space requirement and thereby considerably reduces the fine dust emissions of the boiler. Cleaning is carried out fully automatically in the joint ash box at the front of the boiler.

Advantages:
- Can be retrofitted on site
- No additional space required
- Combined cleaning with heat exchanger optimisation system (WOS)

NEW! Integrated particle separator (electrostatic precipitator) can be added at any time

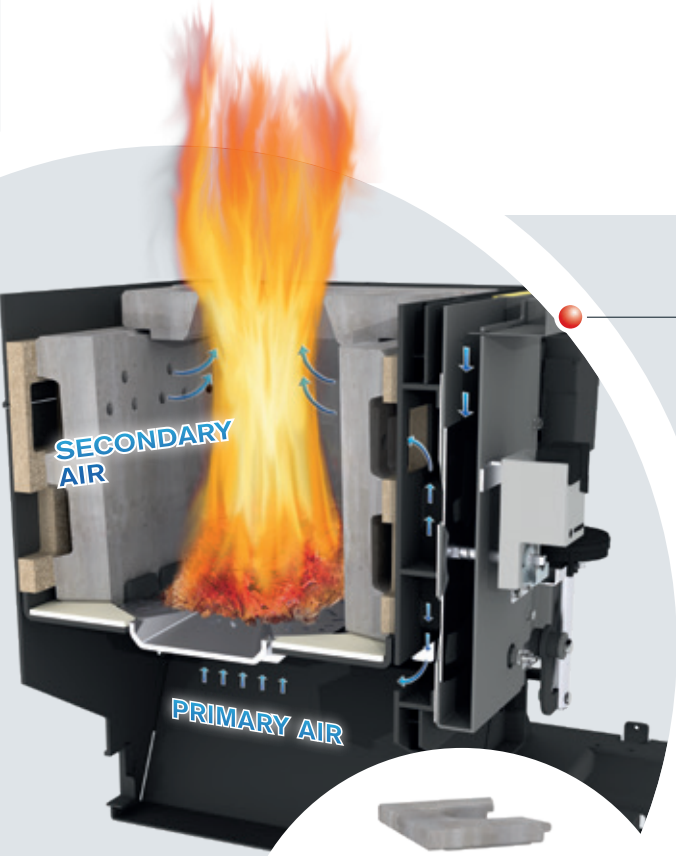

High-temperature silicon carbide combustion chamber and perfect combustion control

The firebricks are made entirely of high-quality fireproof material (silicon carbide). The hot combustion zone ensures optimal combustion and very low emissions.

Patented firebrick!

The patented shaping of the firebrick stones gives the air supply in the combustion chamber particularly good airtightness without the need to use expensive wearing seals. The new shape of the stones also considerably simplifies the maintenance of the combustion chamber as they can be removed easily.

Advantages:
- Highest temperature resistance for a long service life
- Optimum emission values
- Adapts automatically to changing fuel qualities

Ash discharge system with separate ash screws and ash rakes

Ash is automatically emptied from the combustion chamber and the heat exchanger into the ash container using two separate ash screws, which are powered by a communal geared motor. This ensures a clear separation and absolute tightness between the combustion chamber and the heat exchanger and eliminates the risk of air leaks. The ash screws are speed controlled. The boiler automatically generates a warning message when the ash box is too full.

At the same time, the joint geared motor **drives the ash rake** (tested for many years in Froling large-scale boiler systems) in the lower reversing chamber, which transports the heat exchanger ash reliably to the side ash screw.

Advantages:
- Optimal emptying
- No risk of air leakage thanks to twin-chamber ash container
- Just one common drive

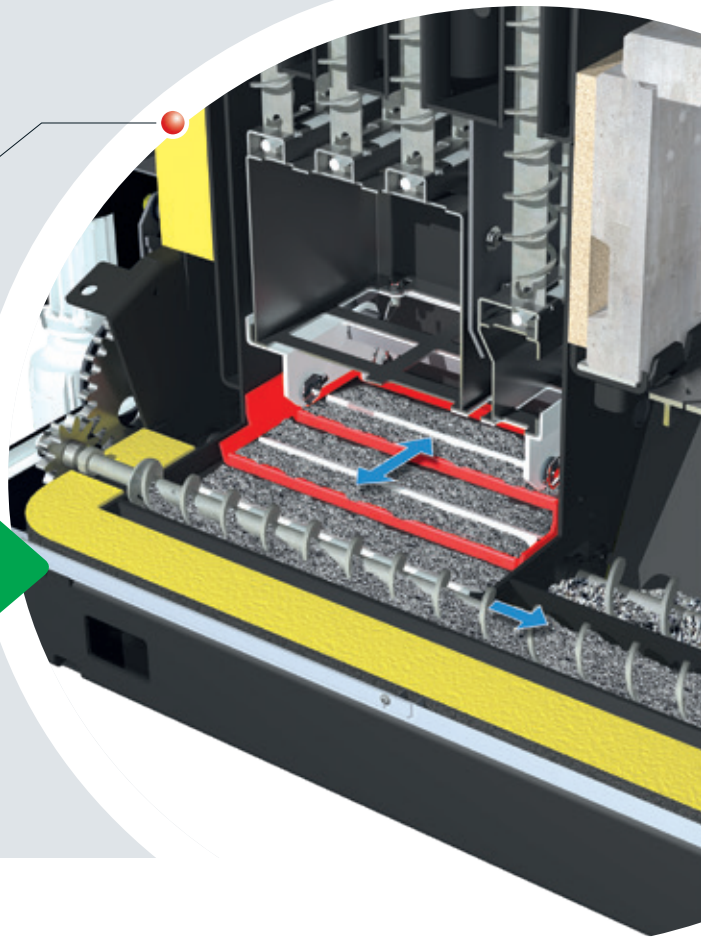

SPECIAL TIPPING GRATE TECHNOLOGY
WITH 110° TIPPING GRATE INCLINATION

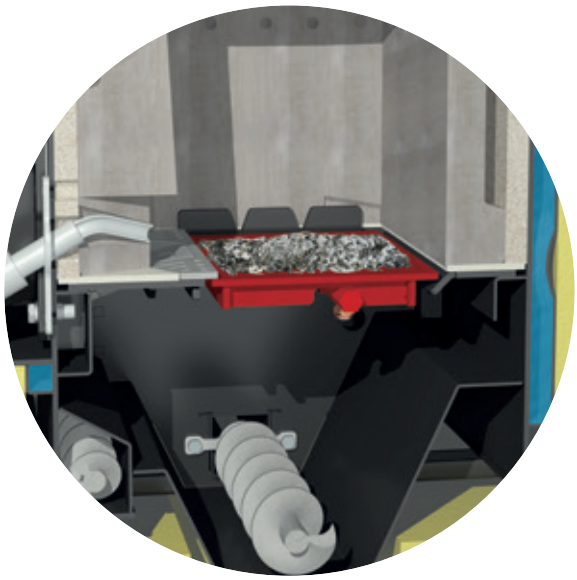

Two-part combustion grate consisting of a fixed insertion zone and automatic tipping grate guarantee energy-saving operation and lowest emissions.

Due to the 110° inclination, the ash is completely emptied from the tipping grate and discharged into the large-volume mobile ash container by means of the ash screw.

1 tipping grate (20 - 60 kW)

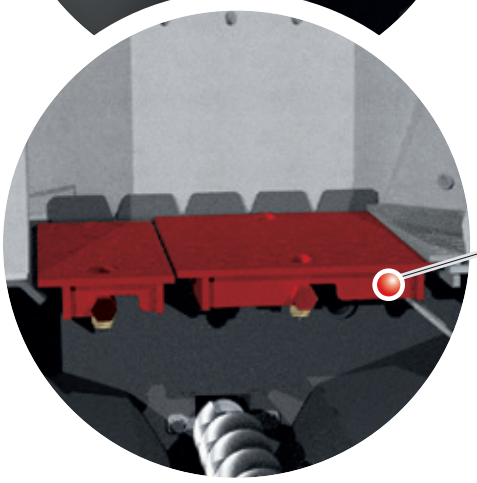

2 tipping grates (80 - 250 kW)

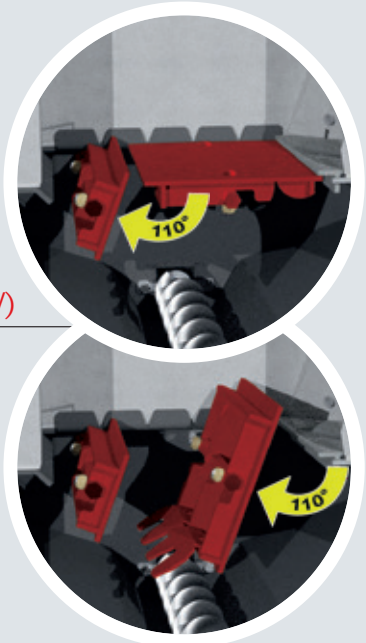

EXTRA CONVENIENCE WITH THE EXTERNAL ASH BOX

With automatic ash removal, the ash is fed into an external ash container. The clever locking mechanism makes it quick and easy to remove the ash container.

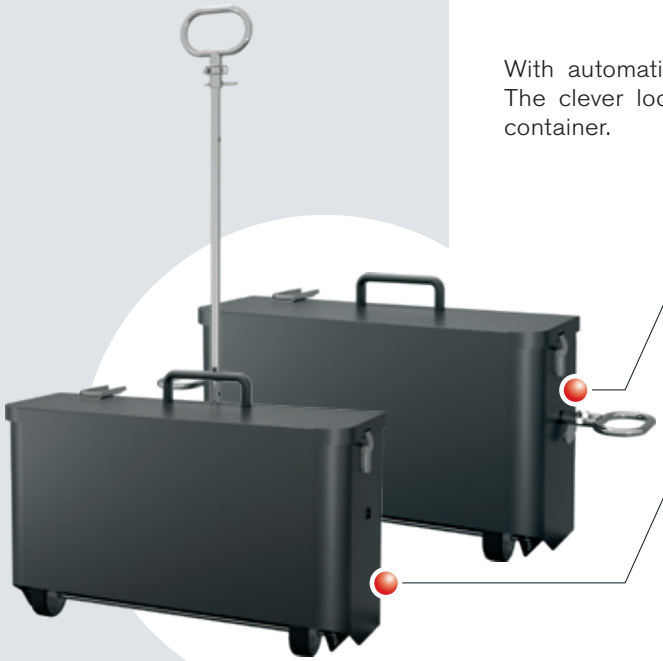

Side carrying handles for quick handling

Easy removal by means of transport rollers

The side carrying handles also allow the ash box to be transported comfortably by pallet forks (e.g. a front loader, forklift truck, etc.).

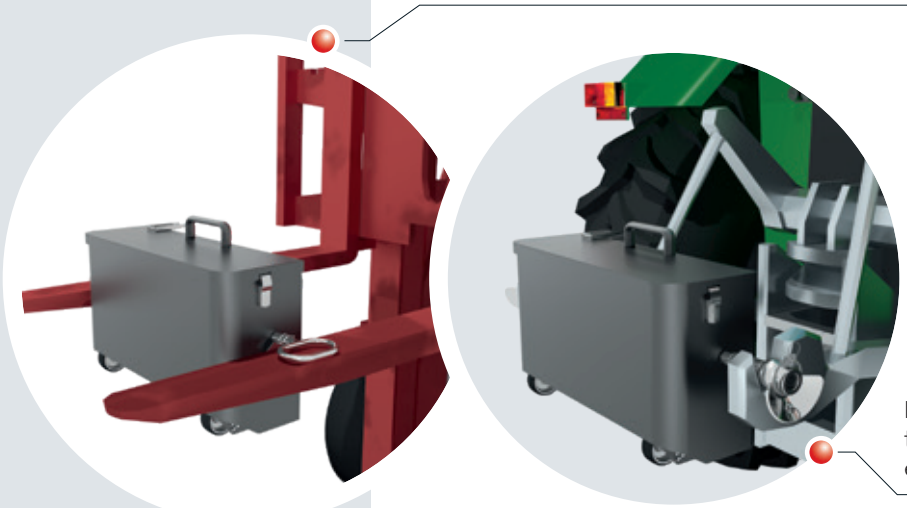

Practical hydraulic device for transporting with the tractor and easy emptying (tipping).

Optional: ash discharge system with bin or ash container with open bottom

For added convenience, ash can optionally be emptied into a standard 240 l dustbin or the 330 l container with open bottom. The ash is automatically conveyed into the dustbin where it can be easily emptied. This ensures long emptying intervals and maximum convenience.

Ash discharge system with bin (240 litres)

Ash container with open bottom (330 litres)

OPTIMISED FUEL TRANSPORT

No sloping sides required!

Temperature monitoring device in the fuel store (only required in Austria).

Monitored gravity shaft cover

Inspection opening
for easy access to the shear edge.

Sturdy stoker screw for reliable fuel feed with automatic turn control.

Robust agitator head

Maintenance-free agitator gearbox

Strong spring blades
for even fuel transport (for wood chips up to P31S / G50).

No sloping sides required

None of Froling's discharge systems requires sloping sides. Without sloping sides, the raising plate fitted to the trough ensures simple operation.

Shear edge

The robust shear plate with cutting edge breaks up larger pieces of fuel guaranteeing continuous fuel feed.

Progressive dosing screw and special trapezoidal duct for minimal force

The plug-in screw system with standard extension pieces between 100 and 2,000 mm (graduations every 100/200 mm) allows easy assembly and flexible positioning of the system in the boiler room.

Special trapezoidal duct

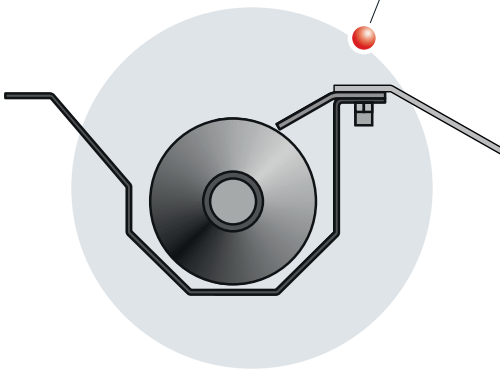

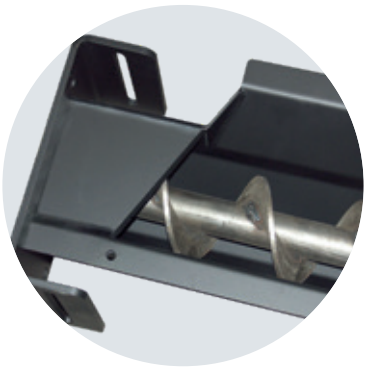

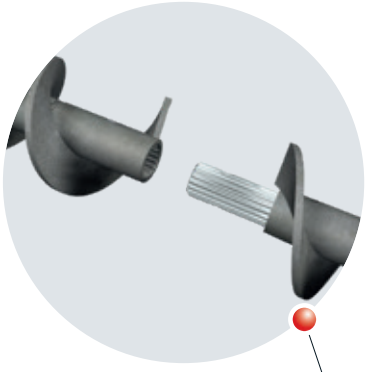

Plug-in screw system

Flexible ball joint

The ball joint is a flexible connecting piece between the discharge screw and the stoker unit. Offering continuous adjustment of the inclinations (up to 15°) and angles, the ball joint allows flexible planning.

High volume rotary valve (Ø 200 mm)

The rotary valve with two large chambers offers maximum burn back protection and continuous material transport.

Highly efficient spur gears

The **powerful, energy-saving spur gears** with a drive power of 0.25 kW ensure that even larger wood chip pieces can be shredded and transported. This design strikes the perfect balance between power and service life.

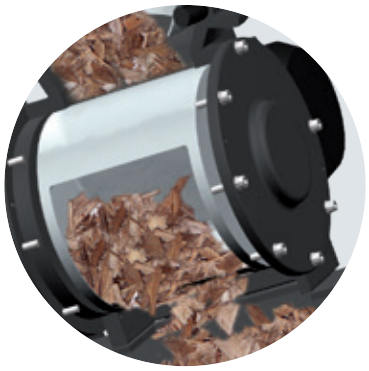

Energy-saving drive motor (only 0.25 kW)

Sturdy stoker unit

The extremely compact stoker unit of the Froling T4e in combination with the rotary valve guarantees maximum burn back protection and reliable fuel feed to the combustion zone. The stoker unit is driven together with the rotary valve by an energy-saving geared motor (highly efficient spur gears with just 0.37 kW power consumption, only 0.55 kW from 80 kW), thus guaranteeing maximum energy efficiency.

The Froling stoker screw with Ø 100 mm or Ø 150 mm (for T4e 200/250) is the optimum solution for safe fuel transport of wood chips up to P31S (previously G50).

Advantages:
- Flexible set-up
- Top burn-back protection
- Low energy consumption
- Great space saving due to the low design height of the stoker unit

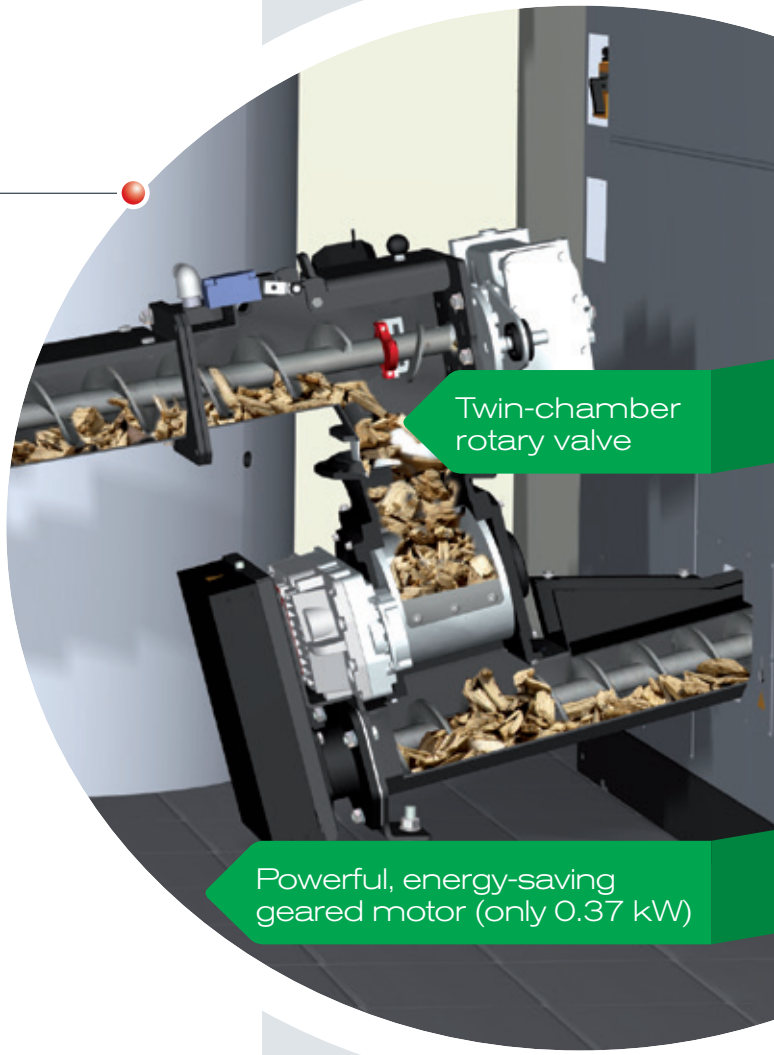

Progressive dosing screw with modular plug-in system

The progressive feed screw guarantees reliable fuel transport. Thanks to the progressive screw raise, the material does not get compacted and can always be moved on easily. This ensures less force and energy consumption.

The modular design of the feed screw with standard extension pieces between 100 and 2,000 mm (graduations every 100/200 mm) allows easy assembly and flexible positioning of the system in the boiler room.

The Froling feed screw does not require sloping sides.

Advantages:
- Flexible set-up
- Reliable material transport
- Low energy

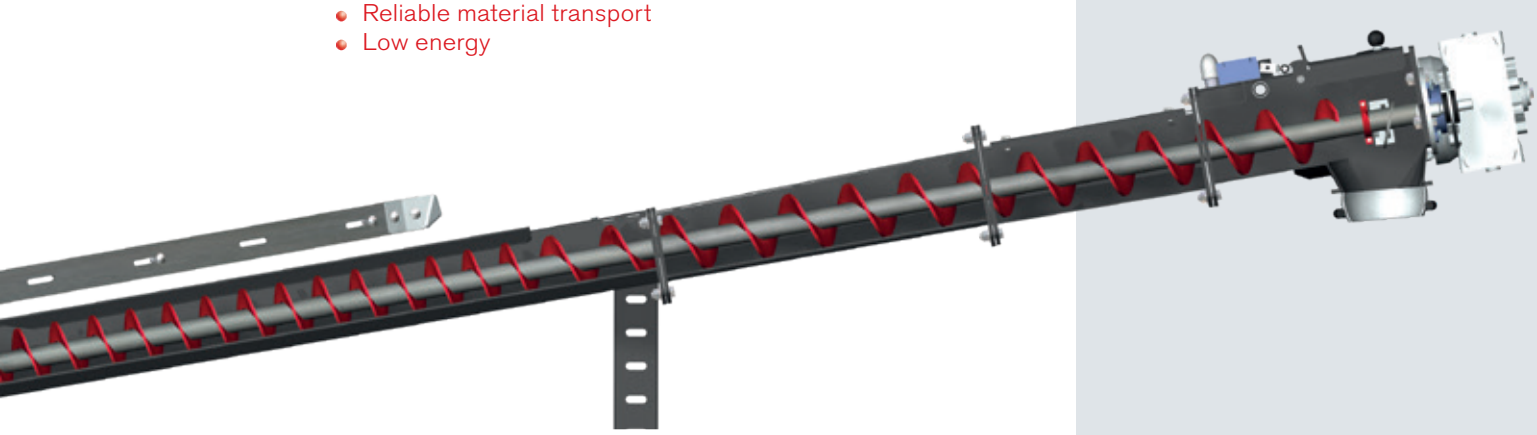

High volume twin-chamber rotary valve

The twin-chamber rotary valve offers maximum operating safety. The rotary valve forms a reliable separation between the discharge system and the feed unit, providing optimal burn back protection. The advanced system design with two spacious chambers ensures that the fuel is transported continuously to the combustion zone. This optimal fuel metering ensures the best possible combustion values.

The rotary valve is extremely quiet and uses only minimal power.

Advantages:

- Continuous flow of material
- Top burn-back protection
- Suitable for P31S (previously G50) wood chips
- 200 mm rotor diameter

The two large chambers (200 mm rotor diameter) are especially suitable for transporting wood chips up to P31S (previously G50). High resistance is recognised automatically. The rotary valve and screw move backwards (several times depending on the parameters set) until transport can be re-started.

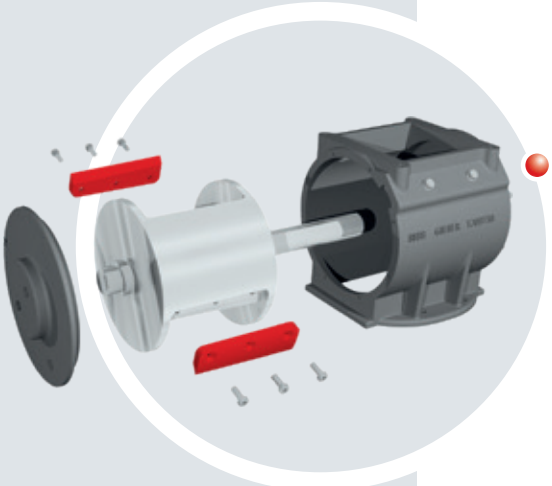

Replaceable blades

The high-quality cutting edges of the blades can also easily cut through coarser pieces of wood chip. The blades both in the rotor and the housing can be simply removed and sharpened if necessary.

ROTARY AGITATOR DISCHARGE SYSTEMS
WITH COMBINED DRIVE

The simple and effective design of Froling's rotary agitator discharge systems ensures smooth operation. Any problematic materials (e.g. foreign bodies) are automatically detected and removed by a reverse turn of the screws (turn control). The feed screw with progressive screw raise ensures low energy consumption.

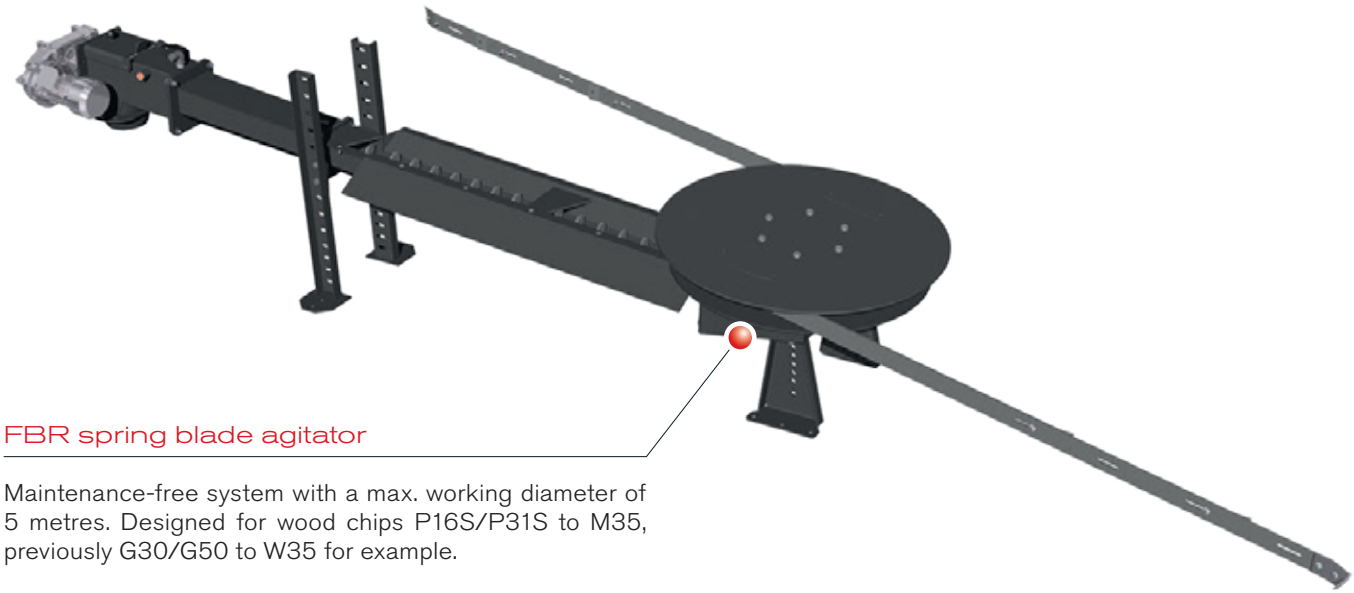

FBR spring blade agitator

Maintenance-free system with a max. working diameter of 5 metres. Designed for wood chips P16S/P31S to M35, previously G30/G50 to W35 for example.

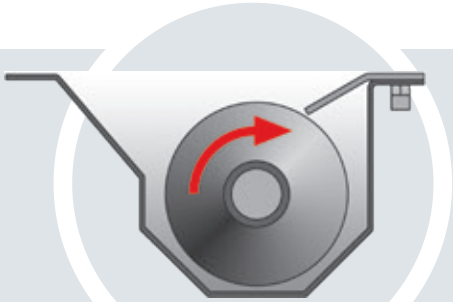

Special trapezoidal duct

The special trapezoidal shape of the trough ensures that fuel is transported smoothly. The system is easy to operate so it saves energy even when feeding in the maximum amount of pellets.

Optional fibre shredder

If the material is particularly fibrous, the optional fibre shredder can shred long parts, thus ensuring reliable transportation of the material.

Rotary agitator arms with tearing hooks

The powerful rotary agitator arms move towards the agitator head during filling and then swing back out when fuel is removed. Together with the sturdy tearing hooks that loosen the fuel, they ensure that the fuel store is emptied.

ROTARY AGITATOR DISCHARGE SYSTEMS
WITH SEPARATE DRIVE

Froling's rotary agitator discharge systems with separate drive offer even greater flexibility. In the FBR-G the rotary agitator is powered independently of the discharge screw. This allows flexible installation and variable adjustment of the feed output. The discharge screws can be positioned on both the left and right of the rotary agitator.

SAMPLE INSTALLATION OPTIONS

One discharge screw on the left

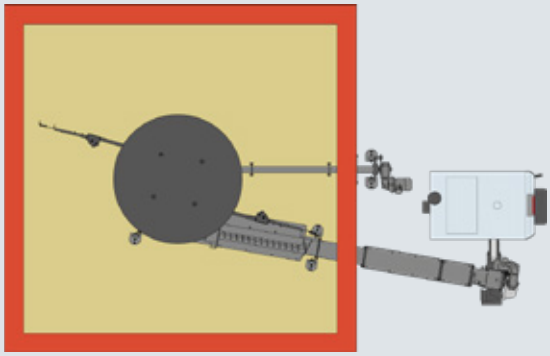

Two discharge screws, one standard, one extra-long

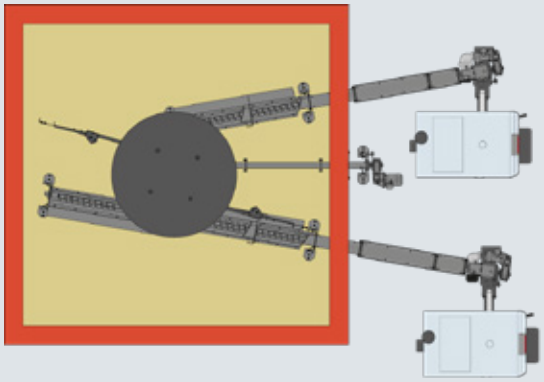

More information in our brochures „Bunker filling systems“!

Vertical feed screw

Froling's vertical feed screw sets new standards for feed output (up to 40m³/h depending on the wood chips used), operating safety and effective distribution. The wood chips are pushed from the tipping gutter into the vertical feed system with a screw, which transports the fuel to the desired height for the distribution device. In this way, the vertical feed screw enables dust-free filling of the store, guaranteeing even distribution of the fuel.

Also available with horizontal distributor screw

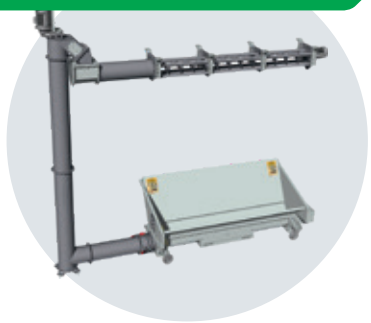

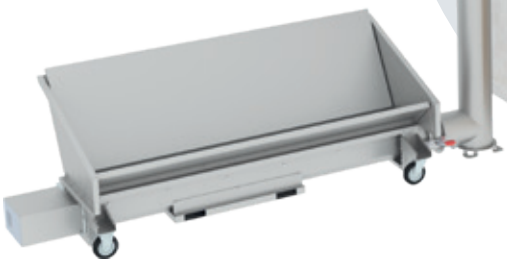

Bunker filling screw

The fuel is transported using the bunker filling screw into the store space via the tipping chute which is located outside the store. The bunker filling screw stops automatically when the bunker is full.

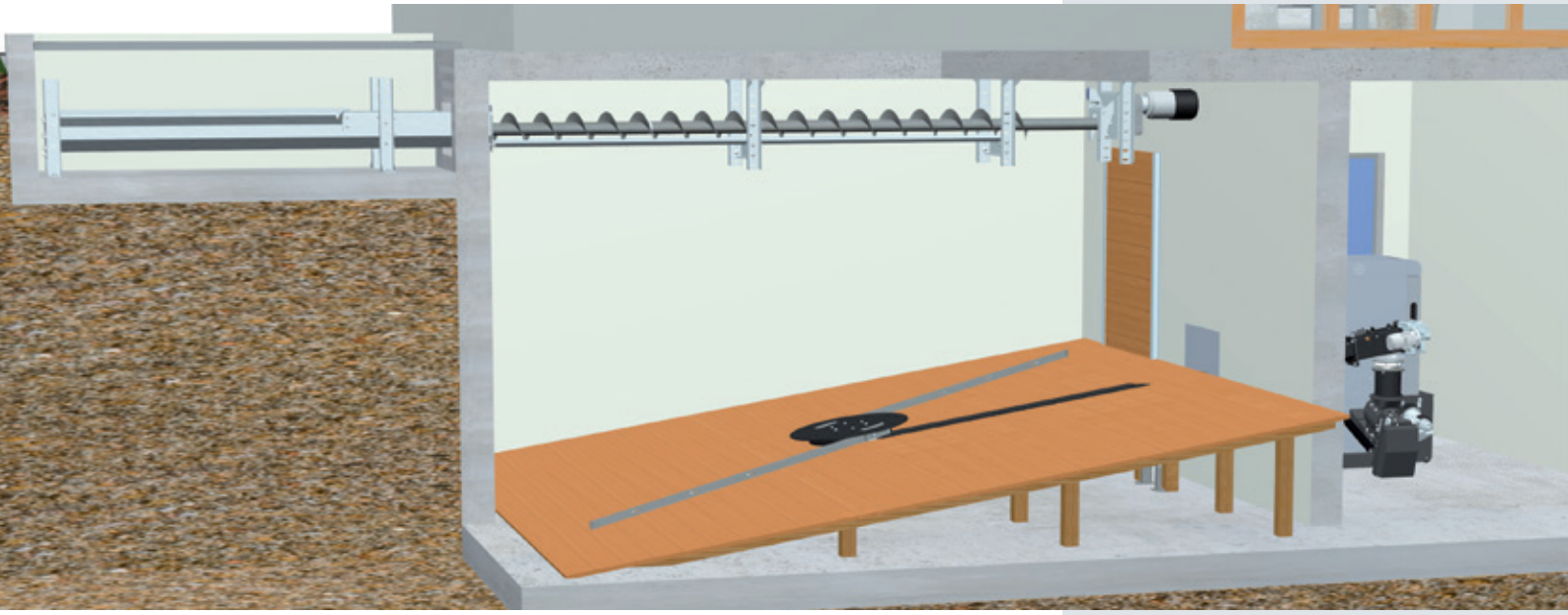

Positioning at ground level

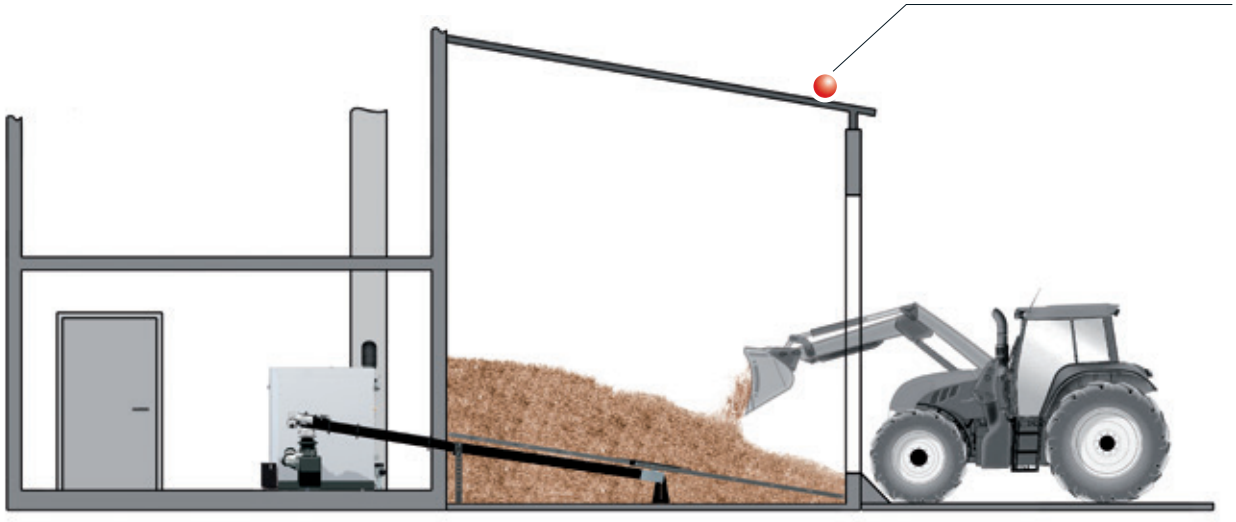

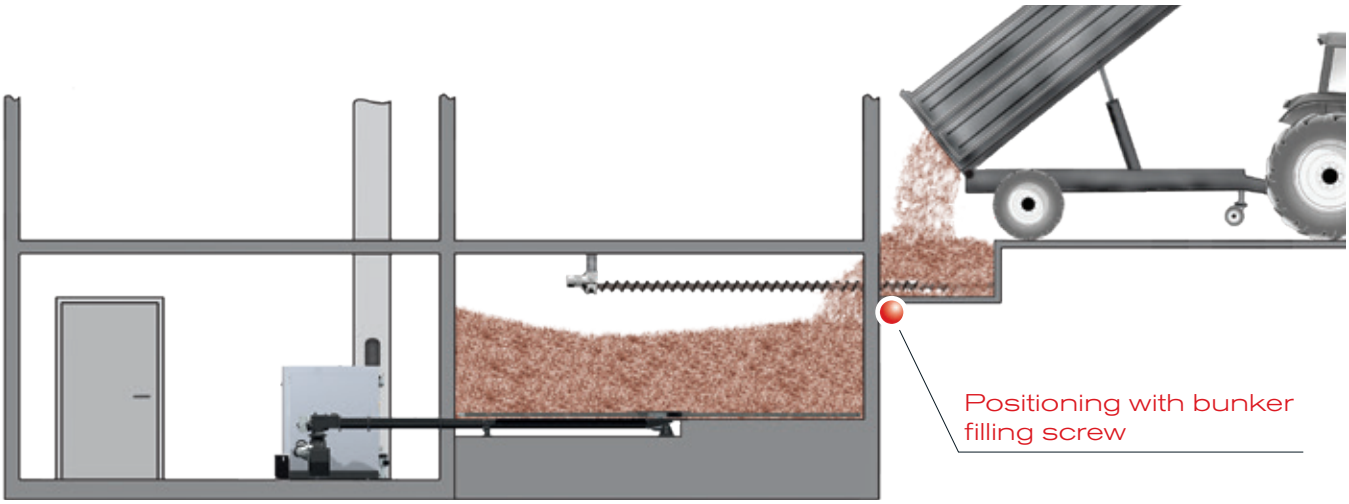

Positioning with bunker filling screw

Positioning with vertical screw

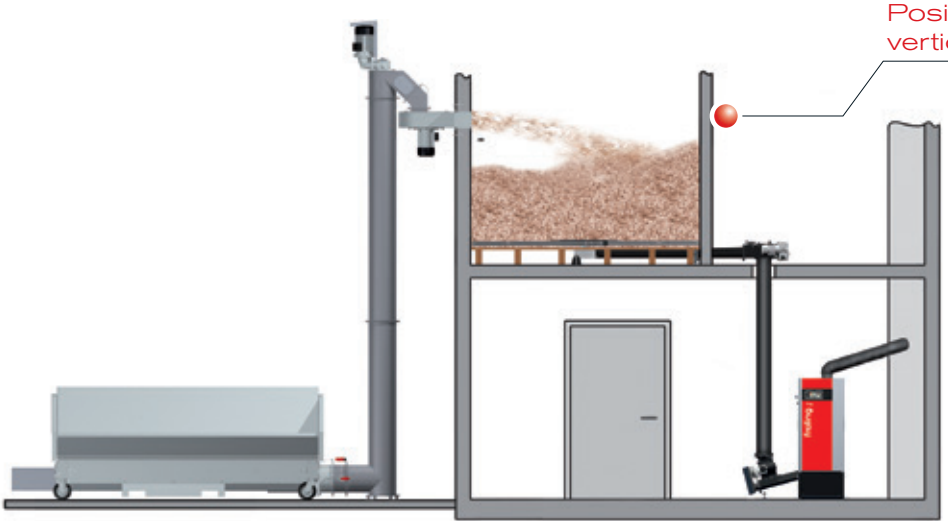

INDIVIDUAL CONTROL UNIT OF THE HEATING SYSTEM

Lambdatronic H 3200 control unit

Fröling provides a future-oriented Lambdatronic H 3200 and a new 7“ touch display. Intelligent control management makes it possible to connect up to 18 heating circuits, up to 4 storage tanks and up to 8 hot water storage tanks. The control unit ensures that the operating statuses are clearly shown. The menu structure is ideally organised to allow easy operation. All essential functions can be selected by simply pressing icons on the large colour display.

Advantages:

- Precise combustion control by a Lambda control using a Lambda probe
- Connection for up to 18 heating circuits, 8 water heaters and up to 4 storage tank
- management systems
- Integration capability for a solar panel system
- LED frame for status display with illuminated presence detection
- Simple and intuitive operation
- Various smart home options (such as Loxone)
- Remote control from the living room (remote control 3200 and RGB 3200 Touch) or via Internet (froeling-connect.com)

SIMPLE & INTUITIVE OPERATION

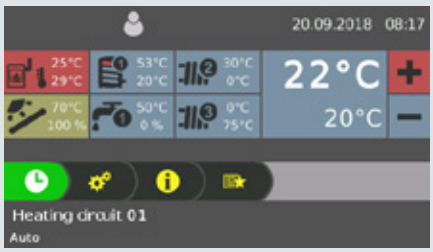

Fig. 1 General overview of the heating circuit (start screen)

Fig. 2 View of the heating times (individually adjustable)

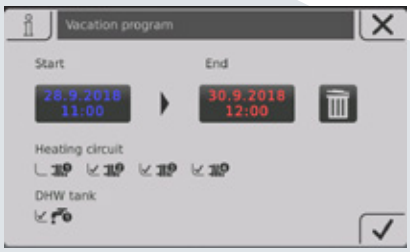

Fig. 3 Overview of the new holiday mode

KEEP TRACK OF EVERYTHING WITH THE FROLING APP

The Froling App allows you to check and control your Froling boiler online from anywhere, at any time. You can read and modify the main status information and settings easily and conveniently online. You can also specify which status messages you want to be informed about via SMS or e-mail (e.g. when the ash box is to be emptied or in the event of a fault message).

Froling boiler (software core module from version V50.04 B05.16) with boiler touch display (from version V60.01 B01.34) a broadband internet connection and a tablet/smartphone with iOS or Android operating system are required. Once the boiler has been connected to the internet and activated, the system can be accessed 24/7 from anywhere using a web-enabled device (mobile, tablet, PC, etc.). The app is available in the Android Play Store and iOS App Store.

- Simple and intuitive operation of the boiler
- Status information can be called up and changed within seconds
- Individual naming of the heating circuits
- Changes of status are notified directly to the user (e.g. via e-mail or push notifications)
- No additional hardware required (such as an Internet gateway)

SMART HOME

Enjoy smart, convenient and piece-of-mind living with the Smart Home connection options from Froling.

Loxone

Combine your Froling heating system with the Loxone Miniserver and the new Froling Extension and implement individual boiler control on the basis of the single room control of the Loxone Smart Home.

Advantages: Easy operation and viewing of the heating circuit via the Loxone Miniserver, immediate notification of status changes and individual operating modes for each situation (presence, holiday, economy mode, etc.)

Modbus

Via the Froling modbus interface, the system can be integrated into a building management system.

ACCESSORIES FOR
EVEN GREATER CONVENIENCE

FRA room temperature sensor

By using the FRA room temperature sensor, sized just 8x8 cm, the main modes of the corresponding heating circuit can be easily selected and adjusted. The FRA can be connected both with and without affecting the store. The adjusting wheel allows you to change the room temperature by up to ± 3°C.

RBG 3200 room console

For even more convenience you can use the RBG 3200 room console and the new RBG 3200 Touch. You can control the heating system easily from your living room. Important system data is clearly displayed and settings can be changed at the push of a button.

RBG 3200 Touch room console

The RBG 3200 Touch has an impressive touchpad interface. The menu structure means it is intuitive and easy to use. The 17x10 cm console with colour screen shows the most important functions at a glance and automatically adjusts the background lighting to the conditions. The room consoles are connected to the boiler controller using a bus cable.

Heating circuit module

With wall casing and one contact sensor as heating circuit control for up to two mixer heating circuits.

Hydraulic module

With wall casing and two immersion sensors to control one or two pumps and one isolating valve with up to six sensors.

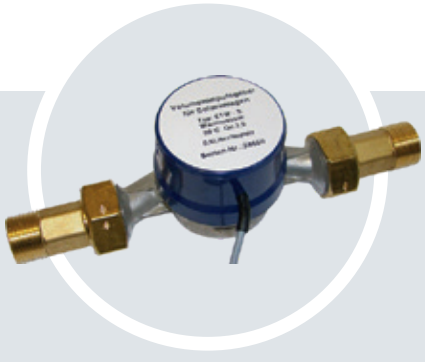

WMZ solar package kit

Set for measuring heat quantity, consisting of a volume pulse transmitter ETW-S 2.5, a collector sensor and two contact sensors for recording flow and return temperatures.

NEW!

FROLING
CASCADE CONTROLLER

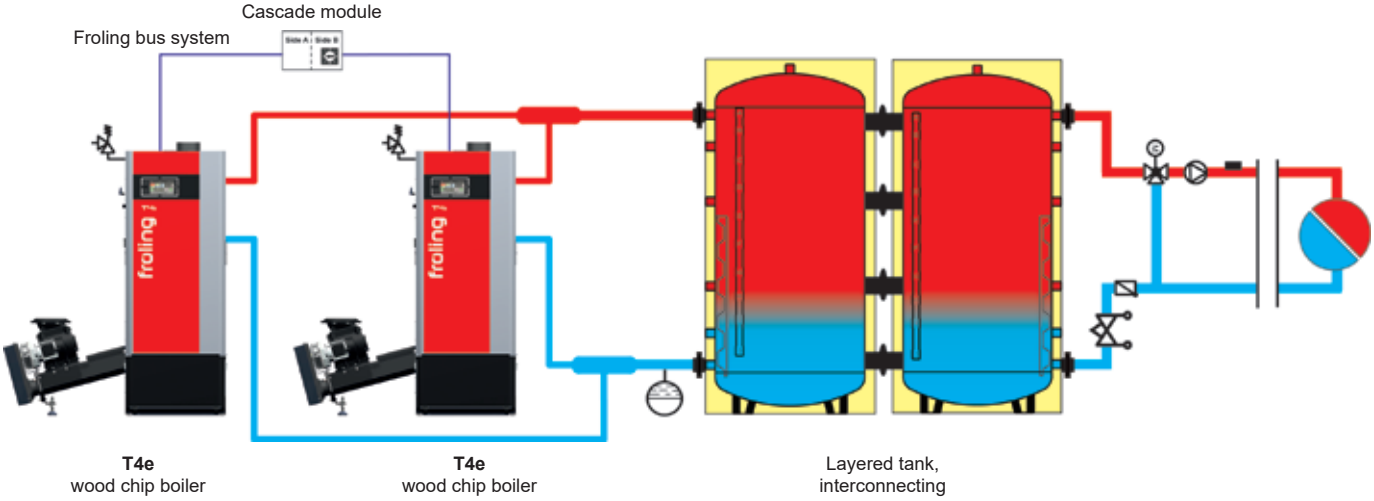

T4e with layered tank, interconnecting

Heating requirements vary considerably, especially in large buildings such as hotels or public buildings. Froling offers the necessary flexibility with a cascade. This smart solution allows you to combine up to four T4e wood chip boilers. You can also see the benefits of a cascade during summer months. If the heat requirement is low, one boiler is often sufficient for hot water preparation. This provides a particularly efficient and economical heating solution. A further advantage is the increased reliability of operation, as the heat is provided by several boilers.

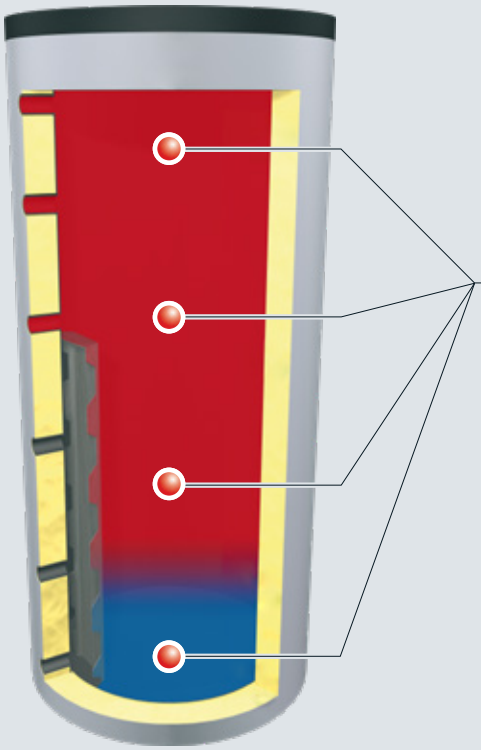

MULTI-SENSOR
STORAGE TANK MANAGEMENT

Precise storage tank level with four sensors

In addition to conventional storage tank management with two sensors, Froling also offers the option of multi-sensor storage tank management. For this function four sensors are distributed along the entire height of the storage tank. The controller then uses these to determine the storage tank fill level. The controller can thus quickly identify load changes and adjust the boiler output early on. Fewer start-stop cycles result in a long boiler life and maximise the system efficiency.

- Minimal start-stop cycles
- High system efficiency
- Optimised for cascade systems

TECHNICAL INFORMATION
SAVES MORE ENERGY

The Froling bus system makes it possible to install extension modules at any location. The local controls can be installed wherever they are needed: at the boiler, at the heat distributor, at the tank, in the living room or in the house next door. Additionally, electric cables are kept to a minimum.

T4e with multiple house system

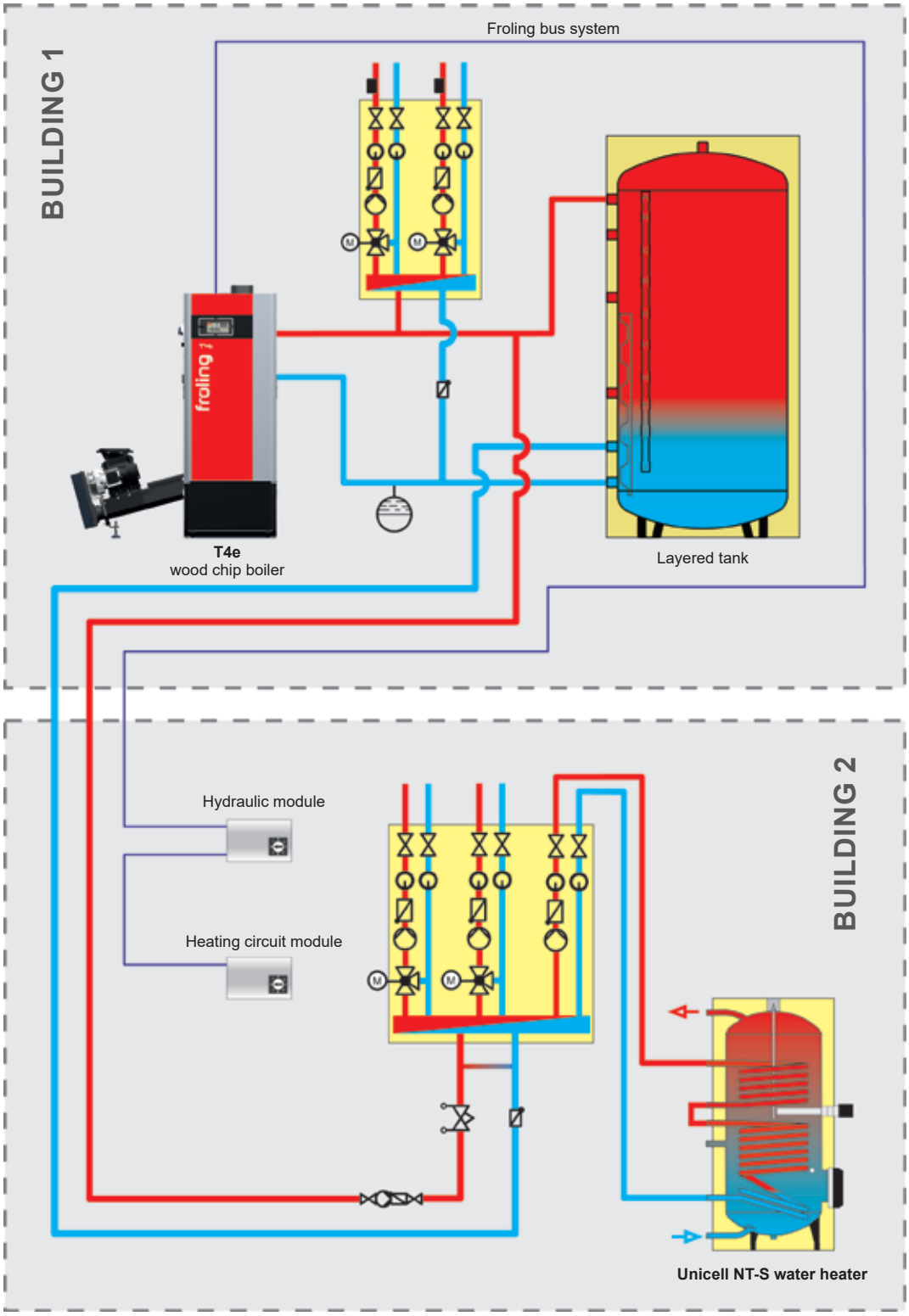

CALCULATING THE FUEL REQUIREMENT

Wood chip fuel specification

P16S woodchips (previously G30)	
Size	3.15 – 16 mm (min. 60%)
Max. length	45 mm
Max. cross-section	2 cm²

P31S woodchips (previously G50)	
Size	3.15 – 31.5 mm (min. 60%)
Max. length	150 mm
Max. cross-section	4 cm²
water content	max. 35%
Bulk weight	approx. 210 - 250 kg/bcm
Energy content	3.5 kWh/kg

Pellets fuel data

Length	3.15 - 40 mm
Diameter	6 mm
Water content	max. 10%
Bulk weight	approx. 650 kg/m³
Ash content	max. 0.5%
Energy content	4.9 kWh/kg

The fuel requirement depends on the fuel quality. The following rule of thumb can be used to make a rough estimate:

Wood chips:

Hardwood P16S/M30 (previously G30/W30):
2.0 bcm per kW heating load
Softwood P16S/M30 (previously G30/W30):
2.5 bcm per kW heating load

Pellets:

1 m³ per kW heating load

Annual wood chip requirement in bulk cubic metres

Source: Bayerische Forstverwaltung

E.g. annual consumption approx. 57,500 kWh (T4e 30 kW, 1,600 full load hours, 93.5% efficiency, wood chips M30 previously W30)

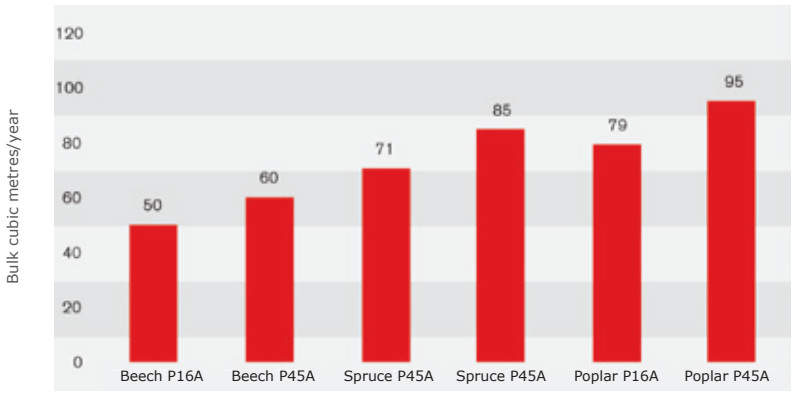

Heating values depending on water content and moisture

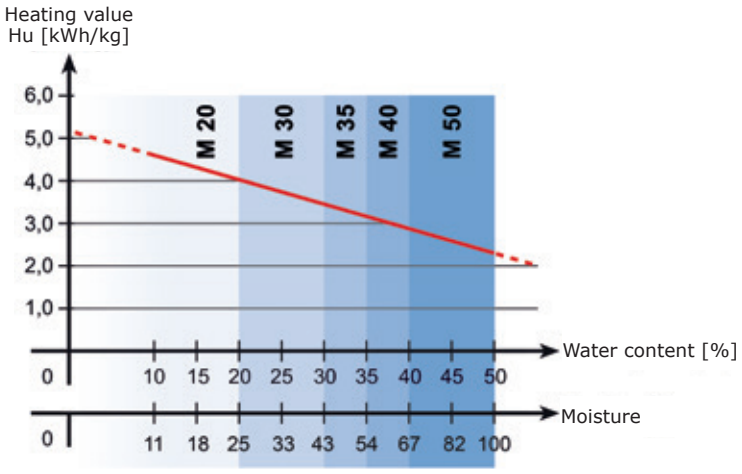

DIMENSIONS T4e
20 - 180 kW

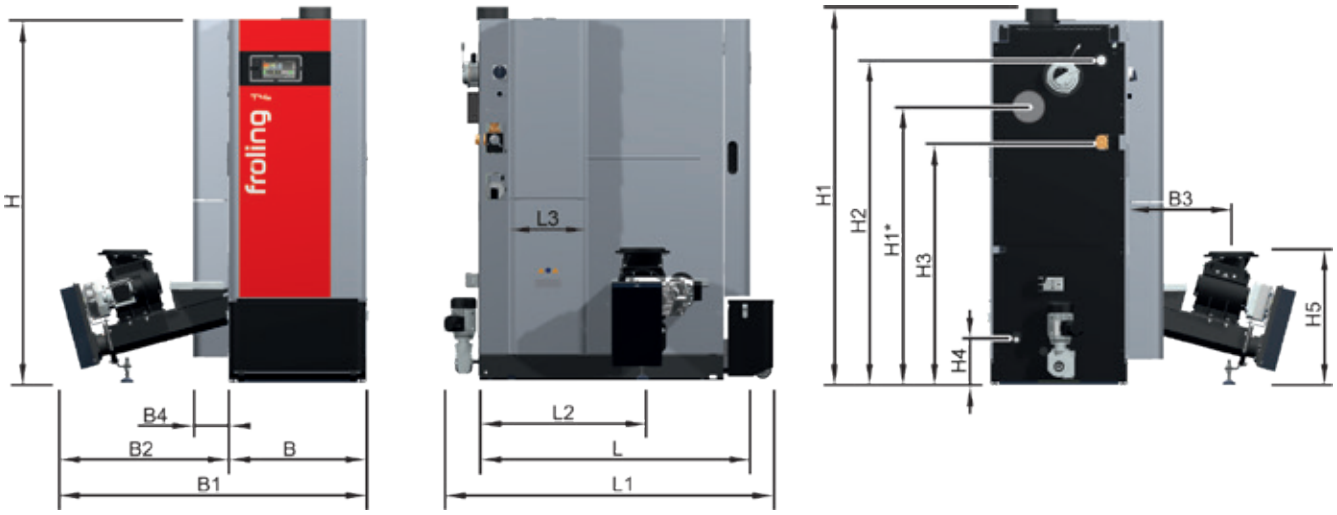

Dimensions [mm]		20 - 35	45 - 60	80 - 110	130 - 180
H	Boiler height	1490	1690	1740	1840
H1	Total height including flue gas pipe connection	1545	1745	1790	1895
H1*	Optional flue gas pipe connection	960	1160	1210	1290
H2	Height of flow connection	1305	1505	1545	1660
H3	Height of return connection with integrated return feed boost	955	1155	1135	1210
H4	Height of the drainage connection	210	210	200	200
H5	Height of rotary valve connection	615	615	615	615
B	Boiler width Width without insulation (width required)	640 -	640 -	790 -	790 -
B1	Total width with stoker unit	1410	1410	1570	1570
B2	Width of stoker unit	770	770	780	780
B3	Distance from boiler side to stoker connection	470	470	480	480
B4	Width of particle separator/electrostatic precipitator (optional)	165	165	165	165
L	Length of boiler	1170	1270	1420	1770
L1	Overall length	1475	1550	1795	2105
L2	Length, back of boiler to stoker connection	690	770	890	1160
L3	Length of particle separator/electrostatic precipitator (optional)	370	370	550	715
	Flue pipe diameter	149	149	179	199
	Diameter boiler flow / boiler return	1 1/4“	1 1/4	2“	2“
	Drainage	1/2“	1/2“	1“	1“

CAUTION: The flow and return connections are located on the stoker side (T4e 20-180). The rear flue pipe connection (optional) is installed on the averted side of the stoker (T4e 20-110). In the case of the T4e 130-180, the rear flue pipe connection (optional) is always on the left side of the boiler.

DIMENSIONS T4e
200 - 250 kW

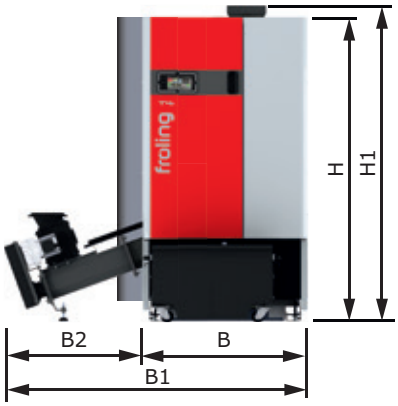

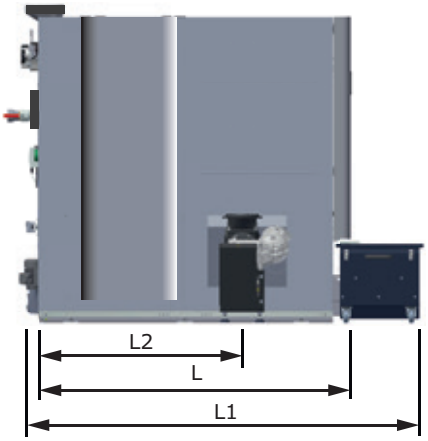

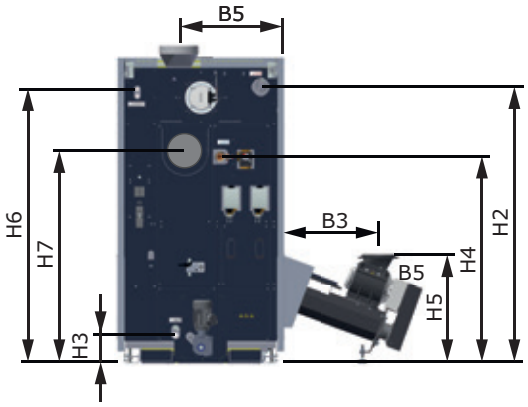

Dimensions [mm]		200	250
H	Boiler height	1950	1950
H1	Total height including flue gas pipe connection	2025	2025
H2	Height of flow connection	1770	1770
H3	Height of the drainage connection	180	180
H4	Height of return connection with integrated return feed boost	1240	1240
H5	Height of rotary valve connection	690	690
H6	Height, safety heat exchanger	1720	1720
H7	Rear flue gas pipe connection (optional for T4e 200 - 250)	1350	1350
B	Boiler width Width without insulation (width required)	1060 980	1060 980
B1	Total width with stoker unit	1955	1955
B2	Width of stoker unit	890	890
L	Length of boiler	2005	2005
L1	Overall length	2550	2550
L2	Length, back of boiler to stoker connection	1310	1310
	Flue pipe diameter	249	249
	Diameter boiler flow / boiler return	2 1/2“	2 1/2“
	Drainage	1“	1“

TECHNICAL SPECIFICATIONS

Technical specifications - T4e		20	25	30
Nominal output	[kW]	19,9	25,1	30
Thermal output range	[kW]	5,95 - 19,9	7,51 - 25,1	9 - 30
Electrical connection	[V/Hz/A]	400V / 50Hz / fused C16A		
Power consumption wood chip mode NL/PL	[W]	48 / 39	55 / 39	59 / 39
Power consumption pellet mode NL/PL	[W]	55 / 42	60 / 40	73 / 43
Weight of boiler (including stoker, without water)	[kg]	740	740	740
Boiler capacity (water)	[l]	117	117	117
Maximum boiler temperature setting	[°C]	90	90	90
Permitted operating pressure	[bar]	4	4	4
Permitted fuel as per EN ISO 17225[1)]		Part 2: Wood pellets class A1 / D06 Part 4: Wood chips class A2 / P16S-P31S		

		35	45	50
Nominal output	[kW]	35	45	49,9
Thermal output range	[kW]	10,5 - 35	13,5 - 45	14,9 - 49,9
Electrical connection	[V/Hz/A]	400V / 50Hz / fused C16A		
Power consumption wood chip mode NL/PL	[W]	63 / 38	85 / 61	94 / 61
Power consumption pellet mode NL/PL	[W]	84 / 46	96 / 49	97 / 49
Weight of boiler (including stoker, without water)	[kg]	740	850	850
Boiler capacity (water)	[l]	117	155	155
Maximum boiler temperature setting	[°C]	90	90	90
Permitted operating pressure	[bar]	4	4	4
Permitted fuel as per EN ISO 17225[1)]		Part 2: Wood pellets class A1 / D06 Part 4: Wood chips class A2 / P16S-P31S		

		60	80	90
Nominal output	[kW]	60	80	90
Thermal output range	[kW]	18 - 60	24 - 80	27 - 90
Electrical connection	[V/Hz/A]	400V / 50Hz / fused C16A		
Power consumption wood chip mode NL/PL	[W]	113 / 61	114 / 47	126 / 51
Power consumption pellet mode NL/PL	[W]	99 / 49	102 / 48	116 / 49
Weight of boiler (including stoker, without water)	[kg]	850	1160	1160
Boiler capacity (water)	[l]	155	228	228
Maximum boiler temperature setting	[°C]	90	90	90
Permitted operating pressure	[bar]	4	4	4
Permitted fuel as per EN ISO 17225[1)]		Part 2: Wood pellets class A1 / D06 Part 4: Wood chips class A2 / P16S-P31S		

		100	110	130
Nominal output	[kW]	100	110	130
Thermal output range	[kW]	30 - 100	33 - 110	39 - 130
Electrical connection	[V/Hz/A]	400V / 50Hz / fused C16A		
Power consumption wood chip mode NL/PL	[W]	138 / 56	138 /57	136 / 59
Power consumption pellet mode NL/PL	[W]	129 / 48	128 / 49	124 / 52
Weight of boiler (including stoker, without water)	[kg]	1160	1160	1500
Boiler capacity (water)	[l]	228	228	320
Maximum boiler temperature setting	[°C]	90	90	90
Permitted operating pressure	[bar]	4	4	4
Permitted fuel as per EN ISO 17225[1)]		Part 2: Wood pellets class A1 / D06 Part 4: Wood chips class A2 / P16S-P31S		

T4e WOOD CHIP BOILER

		140	150	160
Nominal output	[kW]	140	150	160
Thermal output range	[kW]	47 - 140	45 - 150	48 - 160
Electrical connection	[V/Hz/A]	400V / 50Hz / fused C16A		
Power consumption wood chip mode NL/PL	[W]	137 / 58	136 / 59	136 / 60
Power consumption pellet mode NL/PL	[W]	125 / 51	124 / 52	124 / 52
Weight of boiler (including stoker, without water)	[kg]	1500	1500	1500
Boiler capacity (water)	[l]	320	320	320
Maximum boiler temperature setting	[°C]	90	90	90
Permitted operating pressure	[bar]	4	4	4
Permitted fuel as per EN ISO 17225[1)]		Part 2: Wood pellets class A1 / D06 Part 4: Wood chips class A2 / P16S-P31S		

		170	180
Nominal output	[kW]	170	180
Thermal output range	[kW]	51 - 170	59 - 180
Electrical connection	[V/Hz/A]	400V / 50Hz / fused C16A	
Power consumption wood chip mode NL/PL	[W]	136 / 60	136 / 61
Power consumption pellet mode NL/PL	[W]	123 / 53	122 / 54
Weight of boiler (including stoker, without water)	[kg]	1500	1500
Boiler capacity (water)	[l]	320	320
Maximum boiler temperature setting	[°C]	90	90
Permitted operating pressure	[bar]	4	4
Permitted fuel as per EN ISO 17225[1)]		Part 2: Wood pellets class A1 / D06 Part 4: Wood chips class A2 / P16S-P31S	

		200	250
Nominal output	[kW]	199	250
Thermal output range	[kW]	59 - 199	75 - 250
Electrical connection	[V/Hz/A]	400V / 50Hz / fused C16A	
Power consumption wood chip mode NL/PL	[W]	135 / 62	214 / 62
Power consumption pellet mode NL/PL	[W]	120 / 55	162 / 55
Weight of boiler (including stoker, without water)	[kg]	2500	
Boiler capacity (water)	[l]	438	
Maximum boiler temperature setting	[°C]	90	
Permitted operating pressure	[bar]	4	
Permitted fuel as per EN ISO 17225[1)]		Part 2: Wood pellets class A1 / D06 Part 4: Wood chips class A2 / P16S-P31S	

[1)] Detailed information on the fuel is included in the operating instructions, in the section on “Permitted fuels”

The ecodesign requirements according to VO (EU) 2015/1189, Annex II, point 1. are met.

OPERATING AND

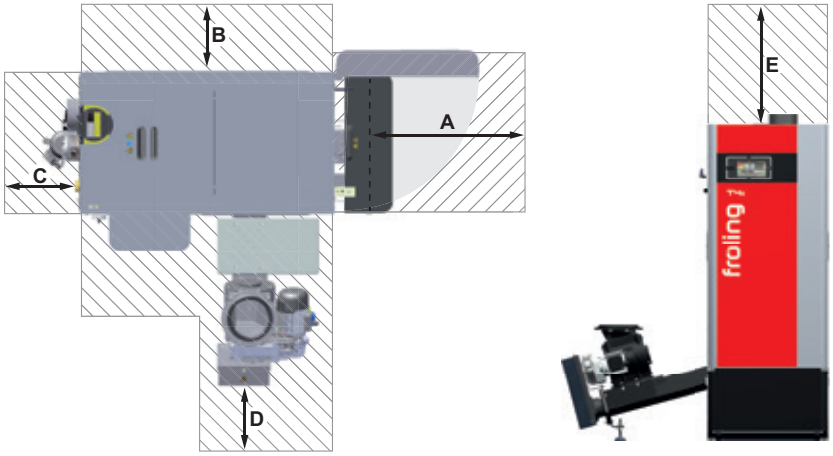

Minimum clearances [mm]	20	25	30	35	45
A Insulated door to wall	700	700	700	700	700
B Side of boiler to wall	150	150	150	150	150
C Back of boiler to wall	500	500	500	500	500
D Stoker to wall	300	300	300	300	300
E Maintenance area above the boiler	500	500	500	500	500
Minimum room height	1800	1800	1800	1800	2000

	50	60	80	90	100
A Insulated door to wall	700	700	800	800	700
B Side of boiler to wall	150	150	150	150	150
C Back of boiler to wall	500	500	500	500	500
D Stoker to wall	300	300	300	300	300
E Maintenance area above the boiler	500	500	500	500	500
Minimum room height	2000	2000	2100	2100	2100

	110	130	140	150	160
A Insulated door to wall	800	800	800	800	800
B Side of boiler to wall	150	150	150	150	150
C Back of boiler to wall	500	500	500	500	500
D Stoker to wall	300	300	300	300	300
E Maintenance area above the boiler	500	500	500	500	500
Minimum room height	2100	2350	2350	2350	2350

	170	180
A Insulated door to wall	800	800
B Side of boiler to wall	150	150
C Back of boiler to wall	500	500
D Stoker to wall	300	300
E Maintenance area above the boiler	500	500
Minimum room height	2350	2350

MAINTENANCE AREAS

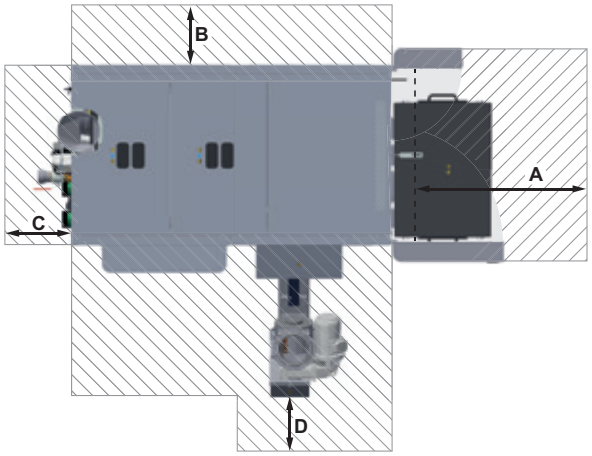

		200	250
A	Insulated door to wall	900	900
B	Side of boiler to wall	150	150
C	Back of boiler to wall	500	500
D	Stoker to wall	300	300
E	Maintenance area above the boiler	500	500
Minimum room height		2500	2500

NOTES

Pellet boiler

PE1 Pellet	7 - 35 kW	P4 Pellet	48 - 105 kW
PE1c Pellet	16 - 22 kW	PT4e	120 - 250 kW

Firewood boiler

S1 Turbo	15 - 20 kW
S3 Turbo	20 - 45 kW
S4 Turbo	22 - 60 kW

Dual fuel boiler

SP Dual compact	15 - 20 kW
SP Dual	22 - 40 kW

Wood chip / Large boilers

T4e	20 - 350 kW	TI	350 kW
Turbomat	150 - 550 kW	Lambdamat	750 - 1500 kW

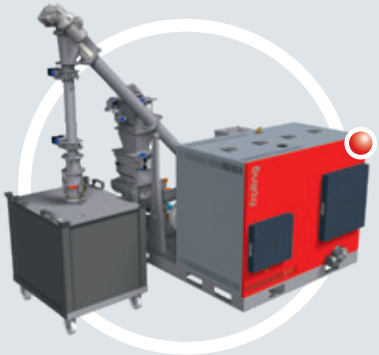

Wood combined heat and power

Fixed-bed gasifier CHP	45 - 500 kWel

Your Froling partner

Fröling Heizkessel- und Behälterbau Ges.m.b.H.
A-4710 Grieskirchen, Industriestr. 12

AT: Tel +43 (0) 7248 606-0
Fax +43 (0) 7248 606-600

DE: Tel +49 (0) 89 927 926-0
Fax +49 (0) 89 927 926-219

E-mail: info@froeling.com
Web: www.froeling.com

P1040321 - All illustrations intended as a guide only! We reserve the right to make technical changes without prior notice. Errors and omissions excepted.

Appendix D Ecological Database Searches

resources.QLD.GOV.AU

Vegetation management report

For Lot: 106 Plan: SP331010
2/14/2025

Queensland Government

This publication has been compiled by Operations Support, Department of Resources.

© State of Queensland, (2025)

The Queensland Government supports and encourages the dissemination and exchange of its information. The copyright in this publication is licensed under a Creative Commons - Attribution 4.0 International (CC BY) licence.

Under this licence you are free, without having to seek our permission, to use this publication in accordance with the licence terms.

You must keep intact the copyright notice and attribute the State of Queensland as the source of the publication.

Note: Some content in this publication may have different licence terms as indicated.

For more information on this licence, visit https://creativecommons.org/licenses/by/4.0/

The information contained herein is subject to change without notice. The Queensland Government shall not be liable for technical or other errors or omissions contained herein. The reader/user accepts all risks and responsibility for losses, damages, costs and other consequences resulting directly or indirectly from using this information.

Recent changes

Updated mapping

Updated vegetation mapping was released on 22 November 2023 and includes the most recent Queensland Herbarium scientific updates to the Regulated Vegetation Management Map, regional ecosystems, essential habitat, wetland and high-value regrowth mapping.

The Department of Environment, Science and Innovation have also updated their koala protection mapping to align with the Queensland Herbarium scientific updates.

The latest version (v10) of the Protected Plants Flora Survey Trigger Map (trigger map) was released on 6 September 2023.

Overview

Based on the lot on plan details you have supplied, this report provides the following detailed information:
Property details - information about the specified Lot on Plan, lot size, local government area, bioregion(s), subregion(s) and catchment(s);

Vegetation management framework - an explanation of the application of the framework and contact details for the Department of Resources who administer the framework;

Vegetation management framework details for the specified Lot on Plan including:

- the vegetation management categories on the property;
- the vegetation management regional ecosystems on the property;
- vegetation management watercourses or drainage features on the property;
- vegetation management wetlands on the property;
- vegetation management essential habitat on the property;
- whether any area management plans are associated with the property;
- whether the property is coastal or non-coastal; and
- whether the property is mapped as Agricultural Land Class A or B;

Protected plant framework - an explanation of the application of the framework and contact details for the Department of Environment, Science and Innovation who administer the framework, including:

- high risk areas on the protected plant flora survey trigger map for the property;

Koala protection framework - an explanation of the application of the framework and contact details for the Department of Environment, Science and Innovation who administer the framework; and

Koala protection framework details for the specified Lot on Plan including:

- the koala district the property is located in;
- koala priority areas on the property;
- core and locally refined koala habitat areas on the property;
- whether the lot is located in an identified koala broad-hectare area; and
- koala habitat regional ecosystems on the property for core koala habitat areas.

This information will assist you to determine your options for managing vegetation under:
- the vegetation management framework, which may include:

- exempt clearing work;
- accepted development vegetation clearing code;
- an area management plan;
- a development approval;

- the protected plant framework, which may include:

- the need to undertake a flora survey;
- exempt clearing;
- a protected plant clearing permit;

- the koala protection framework, which may include:

- exempted development;
- a development approval;
- the need to undertake clearing sequentially and in the presence of a koala spotter.

Other laws

The clearing of native vegetation is regulated by both Queensland and Australian legislation, and some local governments also regulate native vegetation clearing. You may need to obtain an approval or permit under another Act, such as the Commonwealth Government's *Environment Protection and Biodiversity Conservation Act 1999* (EPBC Act). Section 8 of this guide provides contact details of other agencies you should confirm requirements with, before commencing vegetation clearing.

Table of Contents

1. Property details 6
1.1 Tenure and title area 6
1.2 Property location 6
2. Vegetation management framework (administered by the Department of Resources) 7
2.1 Exempt clearing work 7
2.2 Accepted development vegetation clearing codes 7
2.3 Area management plans 8
2.4 Development approvals 8
2.5. Contact information for the Department of Resources 8
3. Vegetation management framework for Lot: 106 Plan: SP331010 9
3.1 Vegetation categories 9
3.2 Regional ecosystems 10
3.3 Watercourses 10
3.4 Wetlands 10
3.5 Essential habitat 10
3.6 Area Management Plan(s) 11
3.7 Coastal or non-coastal 11
3.8 Agricultural Land Class A or B 11
4. Vegetation management framework maps 12
4.1 Regulated vegetation management map 13
4.2 Vegetation management supporting map 14
4.3 Coastal/non-coastal map 15
4.4 Agricultural Land Class A or B as per State Planning Policy: State Interest for Agriculture 16
5. Protected plants framework (administered by the Department of Environment, Science and Innovation (DESI)) 17
5.1 Clearing in high risk areas on the flora survey trigger map 17
5.2 Clearing outside high risk areas on the flora survey trigger map 17
5.3 Exemptions 17
5.4 Contact information for DESI 17
5.5 Protected plants flora survey trigger map 18
6. Koala protection framework (administered by the Department of Environment, Science and Innovation (DESI)) 20
6.1 Koala mapping 20
6.2 Koala habitat planning controls 21
6.3 Koala Conservation Plan clearing requirements 22
6.4 Contact information for DESI 22
7. Koala protection framework details for Lot: 106 Plan: SP331010 23
7.1 Koala districts 23
7.2 Koala priority area, koala habitat area and identified koala broad-hectare map 23
7.3 Koala habitat regional ecosystems for core koala habitat areas 24
8. Other relevant legislation contacts list 25

1. Property details

1.1 Tenure and title area

All of the lot, plan, tenure and title area information associated with property Lot: 106 Plan: SP331010 are listed in Table 1.

Table 1: Lot, plan, tenure and title area information for the property

Lot	Plan	Tenure	Property title area (sq metres)
A	SP320016	Easement	86
106	SP331010	Freehold	114,200

The tenure of the land may affect whether clearing is considered exempt clearing work or may be carried out under an accepted development vegetation clearing code.

Does the property Lot: 106 Plan: SP331010 have a freehold tenure and is in the Wet Tropics of Queensland World Heritage Area?

No, this property is not located in the Wet Tropics of Queensland World Heritage Area.

1.2 Property location

Table 2 provides a summary of the locations for property Lot: 106 Plan: SP331010, in relation to natural and administrative boundaries.

Table 2: Property location details

Local Government(s)	Catchment(s)	Bioregion(s)	Subregion(s)
South Burnett Regional	Burnett	Southeast Queensland	South Burnett

2. Vegetation management framework (administered by the Department of Resources)

The *Vegetation Management Act 1999* (VMA), the Vegetation Management Regulation 2023, the *Planning Act 2016* and the Planning Regulation 2017, in conjunction with associated policies and codes, form the Vegetation Management Framework.

The VMA does not apply to all land tenures or vegetation types. State forests, national parks, forest reserves and some tenures under the *Forestry Act 1959* and *Nature Conservation Act 1992* are not regulated by the VMA. Managing or clearing vegetation on these tenures may require approvals under these laws.

The following native vegetation is not regulated under the VMA but may require permit(s) under other laws:

- grass or non-woody herbage;
- a plant within a grassland regional ecosystem identified in the Vegetation Management Regional Ecosystem Description Database (VM REDD) as having a grassland structure; and
- a mangrove.

2.1 Exempt clearing work

Exempt clearing work is an activity for which you do not need to notify the Department of Resources or obtain an approval under the vegetation management framework. Exempt clearing work was previously known as exemptions.

In areas that are mapped as Category X (white in colour) on the regulated vegetation management map (see section 4.1), and where the land tenure is freehold, indigenous land and leasehold land for agriculture and grazing purposes, the clearing of vegetation is considered exempt clearing work and does not require notification or development approval under the vegetation management framework. For all other land tenures, contact the Department of Resources before commencing clearing to ensure that the proposed activity is exempt clearing work.

A range of routine property management activities are considered exempt clearing work. A list of exempt clearing work is available at

https://www.qld.gov.au/environment/land/management/vegetation/clearing-approvals/exemptions/.

Exempt clearing work may be affected if the proposed clearing area is subject to development approval conditions, a covenant, an environmental offset, an exchange area, a restoration notice, or an area mapped as Category A. Exempt clearing work may require approval under other Commonwealth, State or Local Government laws, or local government planning schemes. Contact the Department of Resources prior to clearing in any of these areas.

2.2 Accepted development vegetation clearing codes

Some clearing activities can be undertaken under an accepted development vegetation clearing code. The codes can be downloaded at

https://www.qld.gov.au/environment/land/management/vegetation/clearing-approvals/codes/

If you intend to clear vegetation under an accepted development vegetation clearing code, you must notify the Department of Resources before commencing. The information in this report will assist you to complete the online notification form.

You can complete the online form at
https://vegetation-apps.dnrm.qld.gov.au

2.3 Area management plans

Area Management Plans (AMP) provide an alternative approval system for vegetation clearing under the vegetation management framework. They list the purposes and clearing conditions that have been approved for the areas covered by the plan. It is not necessary to use an AMP, even when an AMP applies to your property.

On 8 March 2020, AMPs ended for fodder harvesting, managing thickened vegetation and managing encroachment. New notifications cannot be made for these AMPs. You will need to consider options for fodder harvesting, managing thickened vegetation or encroachment under a relevant accepted development vegetation clearing code or apply for a development approval.

New notifications can be made for all other AMPs. These will continue to apply until their nominated end date.

If an Area Management Plan applies to your property for which you can make a new notification, it will be listed in Section 3.6 of this report. Before clearing under one of these AMPs, you must first notify the Department of Resources and then follow the conditions and requirements listed in the AMP.

https://www.qld.gov.au/environment/land/management/vegetation/clearing-approvals/area-management-plans

2.4 Development approvals

If under the vegetation management framework your proposed clearing is not exempt clearing work, or is not permitted under an accepted development vegetation clearing code, or an AMP, you may be able to apply for a development approval. Information on how to apply for a development approval is available at

https://www.qld.gov.au/environment/land/management/vegetation/clearing-approvals/development

2.5. Contact information for the Department of Resources

For further information on the vegetation management framework:

Phone 135VEG (135 834)

Email vegetation@resources.qld.gov.au

Visit https://www.resources.qld.gov.au/?contact=vegetation to submit an online enquiry.

3. Vegetation management framework for Lot: 106 Plan: SP331010

3.1 Vegetation categories

The vegetation categories on your property are shown on the regulated vegetation management map in section 4.1 of this report. A summary of vegetation categories on the subject lot are listed in Table 3. Descriptions for these categories are shown in Table 4.

Table 3: Vegetation categories for subject property

Vegetation category	Area (ha)
Category X	11.42

Table 4: Description of vegetation categories

Category	Colour on Map	Description	Requirements / options under the vegetation management framework
A	red	Compliance areas, environmental offset areas and voluntary declaration areas	Special conditions apply to Category A areas. Before clearing, contact the Department of Resources to confirm any requirements in a Category A area.
B	dark blue	Remnant vegetation areas	Exempt clearing work, or notification and compliance with accepted development vegetation clearing codes, area management plans or development approval.
C	light blue	High-value regrowth areas	Exempt clearing work, or notification and compliance with managing Category C regrowth vegetation accepted development vegetation clearing code.
R	yellow	Regrowth within 50m of a watercourse or drainage feature in the Great Barrier Reef catchment areas	Exempt clearing work, or notification and compliance with managing Category R regrowth accepted development vegetation clearing code or area management plans.
X	white	Clearing on freehold land, indigenous land and leasehold land for agriculture and grazing purposes is considered exempt clearing work under the vegetation management framework. Contact the Department of Resources to clarify whether a development approval is required for other State land tenures.	No permit or notification required on freehold land, indigenous land and leasehold land for agriculture and grazing. A development approval may be required for some State land tenures.

Property Map of Assessable Vegetation (PMAV)

There is no Property Map of Assessable Vegetation (PMAV) present on this property.

3.2 Regional ecosystems

The endangered, of concern and least concern regional ecosystems on your property are shown on the vegetation management supporting map in section 4.2 and are listed in Table 5.

A description of regional ecosystems can be accessed online at
https://www.qld.gov.au/environment/plants-animals/plants/ecosystems/descriptions/

Table 5: Regional ecosystems present on subject property

Regional Ecosystem	VMA Status	Category	Area (Ha)	Short Description	Structure Category
non-rem	None	X	11.42	None	None

Please note:
1. All area and area derived figures included in this table have been calculated via reprojecting relevant spatial features to Albers equal-area conic projection (central meridian = 146, datum Geocentric Datum of Australia 1994). As a result, area figures may differ slightly if calculated for the same features using a different co-ordinate system.
2. If Table 5 contains a Category 'plant', please be aware that this refers to 'plantations' such as forestry, and these areas are considered non-remnant under the VMA.

The VMA status of the regional ecosystem (whether it is endangered, of concern or least concern) also determines if any of the following are applicable:

- exempt clearing work;
- accepted development vegetation clearing codes;
- performance outcomes in State Code 16 of the State Development Assessment Provisions (SDAP).

3.3 Watercourses

Vegetation management watercourses and drainage features for this property are shown on the vegetation management supporting map in section 4.2.

3.4 Wetlands

There are no vegetation management wetlands present on this property.

3.5 Essential habitat

Under the VMA, essential habitat for protected wildlife is native wildlife prescribed under the *Nature Conservation Act 1992* (NCA) as critically endangered, endangered, vulnerable or near-threatened wildlife.

Essential habitat for protected wildlife includes suitable habitat on the lot, or where a species has been known to occur up to 1.1 kilometres from a lot on which there is assessable vegetation. These important habitat areas are protected under the VMA.

Any essential habitat on this property will be shown as blue hatching on the vegetation supporting map in section 4.2.

If essential habitat is identified on the lot, information about the protected wildlife species is provided in Table 6 below. The numeric labels on the vegetation management supporting map can be cross referenced with Table 6 to outline the essential habitat factors for that particular species. There may be essential habitat for more than one species on each lot, and areas of Category A, Category B and Category C can be mapped as Essential Habitat.

Essential habitat is compiled from a combination of species habitat models and buffered species records. Regional ecosystem is a mandatory essential habitat factor, unless otherwise stated. Essential habitat, for protected wildlife, means an area of vegetation shown on the Regulated Vegetation Management Map -

1) that has at least 3 essential habitat factors for the protected wildlife that must include any essential habitat factors that are stated as mandatory for the protected wildlife in the essential habitat database. Essential habitat factors are comprised of - regional ecosystem (mandatory for most species), vegetation community, altitude, soils, position in landscape; or
2) in which the protected wildlife, at any stage of its life cycle, is located.

If there is no essential habitat mapping shown on the vegetation management supporting map for this lot, and there is no table in the sections below, it confirms that there is no essential habitat on the lot.

Category A and/or Category B and/or Category C

Table 6: Essential habitat in Category A and/or Category B and/or Category C

No records

3.6 Area Management Plan(s)

Nil

3.7 Coastal or non-coastal

For the purposes of the accepted development vegetation clearing codes and State Code 16 of the State Development Assessment Provisions (SDAP), this property is regarded as*

Coastal

*See also Map 4.3

3.8 Agricultural Land Class A or B

The following can be used to identify Agricultural Land Class A or B areas under the "Managing regulated regrowth vegetation" accepted development vegetation clearing code:

Does this lot contain land that is mapped as Agricultural Land Class A or B in the State Planning Interactive Mapping System?

Class A (with urban areas masked as per SPP): 11.41 ha

No Class B

Note - This confirms Agricultural Land Classes as per the State Planning Interactive Mapping System only. This response does not include Agricultural Land Classes identified under local government planning schemes. For further information, check the Planning Scheme for your local government area.

See Map 4.4 to identify the location and extent of Class A and/or Class B Agricultural land on Lot: 106 Plan: SP331010.

4. Vegetation management framework maps

Vegetation management maps included in this report may also be requested individually at:
https://www.resources.qld.gov.au/qld/environment/land/vegetation/vegetation-map-request-form

Regulated vegetation management map
The regulated vegetation management map shows vegetation categories needed to determine clearing requirements. These maps are updated monthly to show new property maps of assessable vegetation (PMAV).

Vegetation management supporting map
The vegetation management supporting map provides information on regional ecosystems, wetlands, watercourses and essential habitat.

Coastal/non-coastal map
The coastal/non-coastal map confirms whether the lot, or which parts of the lot, are considered coastal or non-coastal for the purposes of the accepted development vegetation clearing codes and State Code 16 of the State Development Assessment Provisions (SDAP).

Agricultural Land Class A or B as per State Planning Policy: State Interest for Agriculture
The Agricultural Land Class map confirms the location and extent of land mapped as Agricultural Land Classes A or B as identified on the State Planning Interactive Mapping System. Please note that this map does not include areas identified as Agricultural Land Class A or B in local government planning schemes. This map can be used to identify Agricultural Land Class A or B areas under the "Managing regulated regrowth vegetation" accepted development vegetation clearing code.

4.1 Regulated vegetation management map

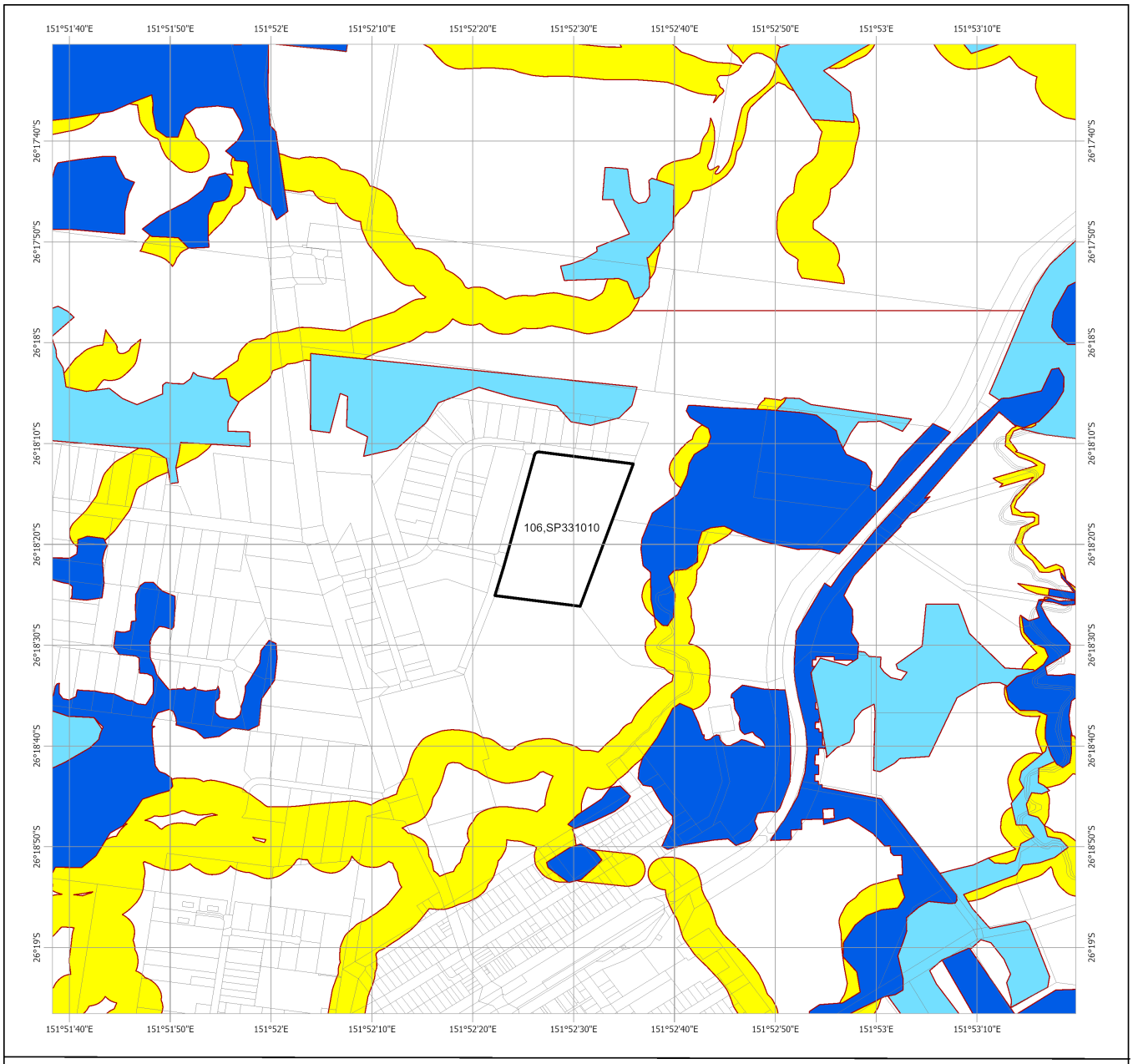

Regulated Vegetation Management Map

- Category A area (Vegetation offsets/compliance notices/VDecs)
- Category B area (Remnant vegetation)
- Category C area (High-value regrowth vegetation)
- Category R area (Reef regrowth watercourse vegetation)
- Category X area (Exempt clearing work on Freehold, Indigenous and Leasehold land)
- Water
- Other land parcel boundaries
- Selected Lot and Plan

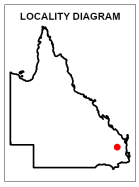

N

0 170 340 510 680 850 m

This product is displayed in:
GDA2020

Disclaimer:
While every care is taken to ensure the accuracy of this product, the Department of Resources makes no representations or warranties about its accuracy, reliability, completeness or suitability for any particular purpose and disclaims all responsibility and all liability (including without limitation, liability in negligence) for all expenses, losses, damages (including indirect or consequential damage) and costs which you might incur as a result of the product being inaccurate or incomplete in any way and for any reason.

Additional information required for the assessment of vegetation values is provided in the accompanying "Vegetation Management Supporting map". For further information go to the web site: www.resources.qld.gov.au or contact the Department of Resources.

Digital data for the regulated vegetation management map is available from the Queensland Spatial Portal at http://www.information.qld.gov.au/

Land parcel boundaries are provided as locational aid only.

This map is updated on a monthly basis to ensure new PMAVs are included as they are approved.

Queensland Government

© The State of Queensland (Department of Resources), 2025

4.2 Vegetation management supporting map

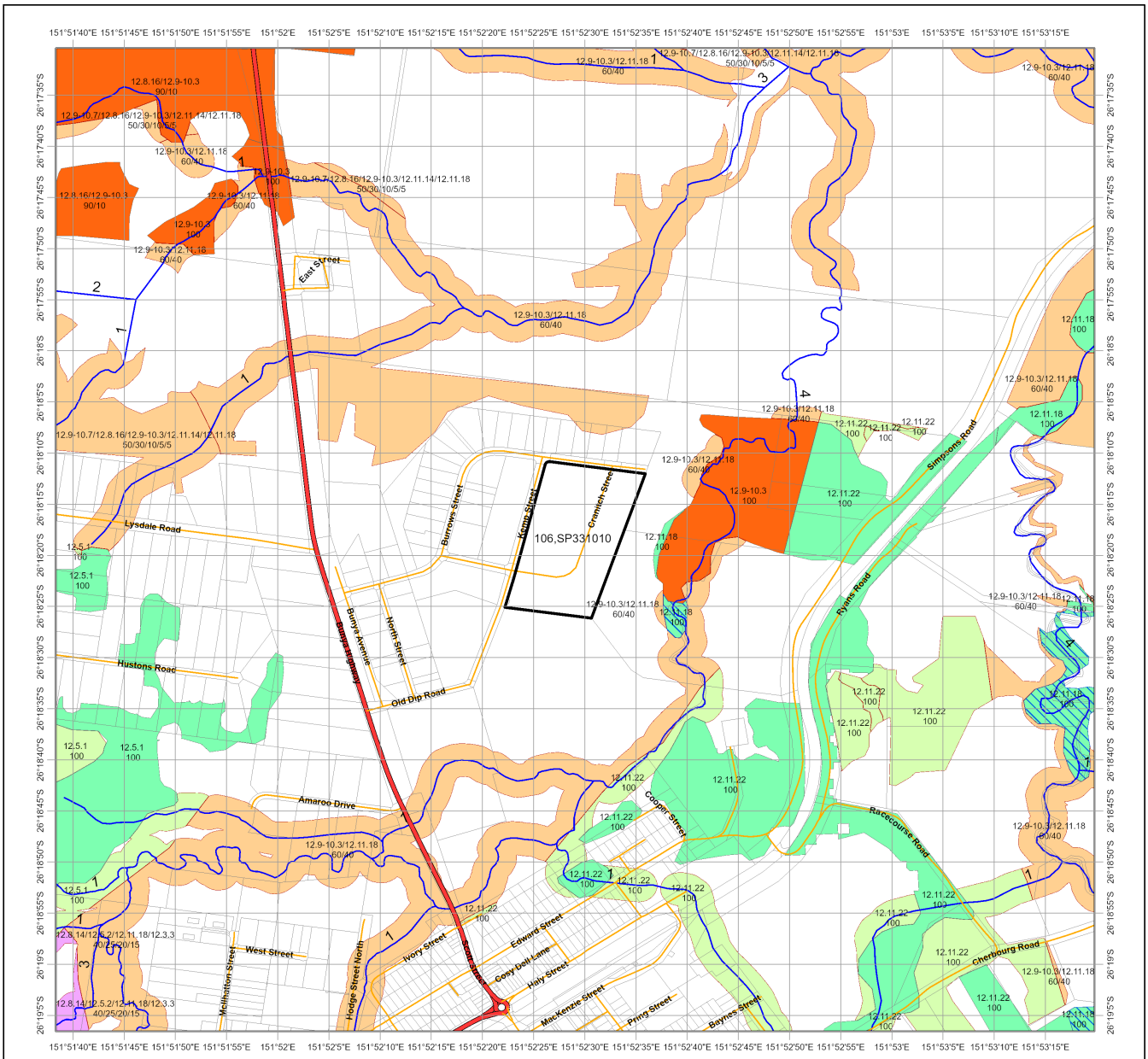

Vegetation Management Supporting Map

- Category A or B area containing endangered regional ecosystems
- Category A or B area containing of concern regional ecosystems
- Category A or B area that is a least concern regional ecosystem
- Category C or R area containing endangered regional ecosystems
- Category C or R area containing of concern regional ecosystems
- Category C or R area that is a least concern regional ecosystem
- Category X area
- Water
- Wetland on the vegetation management wetlands map
- Essential habitat on the essential habitat map
- Essential habitat species record
- Watercourses and drainage features on the vegetation management watercourse and drainage features map (Stream order shown as black number against stream where available)
- Highway
- Connector
- Street/Local Road
- National Parks, State Forest and other reserves
- Other land parcel boundaries
- Selected Lot and Plan

Queensland Government

LOCALITY DIAGRAM

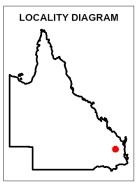

N

0 125 250 375 500 625 m

This product is displayed in: GDA2020

Labels for Essential Habitat are centred on the area of enquiry.

Regional ecosystem linework has been compiled at a scale of 1:100 000, except in designated areas where a compilation scale of 1:50 000 is available. Linework should be used as a guide only. The positional accuracy of RE data mapped at a scale of 1:100 000 is +/- 100 metres.

Disclaimer:
While every care is taken to ensure the accuracy of this product, the Department of Resources makes no representations or warranties about its accuracy, reliability, completeness or suitability for any particular purpose and disclaims all responsibility and all liability (including without limitation, liability in negligence) for all expenses, losses, damages (including indirect or consequential damage) and costs which you might incur as a result of the product being inaccurate or incomplete in any way and for any reason.

Additional information may be required for the purposes of land clearing or assessment of a regional ecosystem map or PMAV applications. For further information go to the web site: www.resources.qld.gov.au or contact the Department of Resources.

Digital data for the vegetation management watercourse and drainage feature map, vegetation management wetlands map, essential habitat map and the vegetation management remnant and regional ecosystem map are available from the Queensland Spatial Portal at http://www.information.qld.gov.au/

Land parcel boundaries are provided as locational aid only.

© The State of Queensland (Department of Resources), 2025

4.3 Coastal/non-coastal map

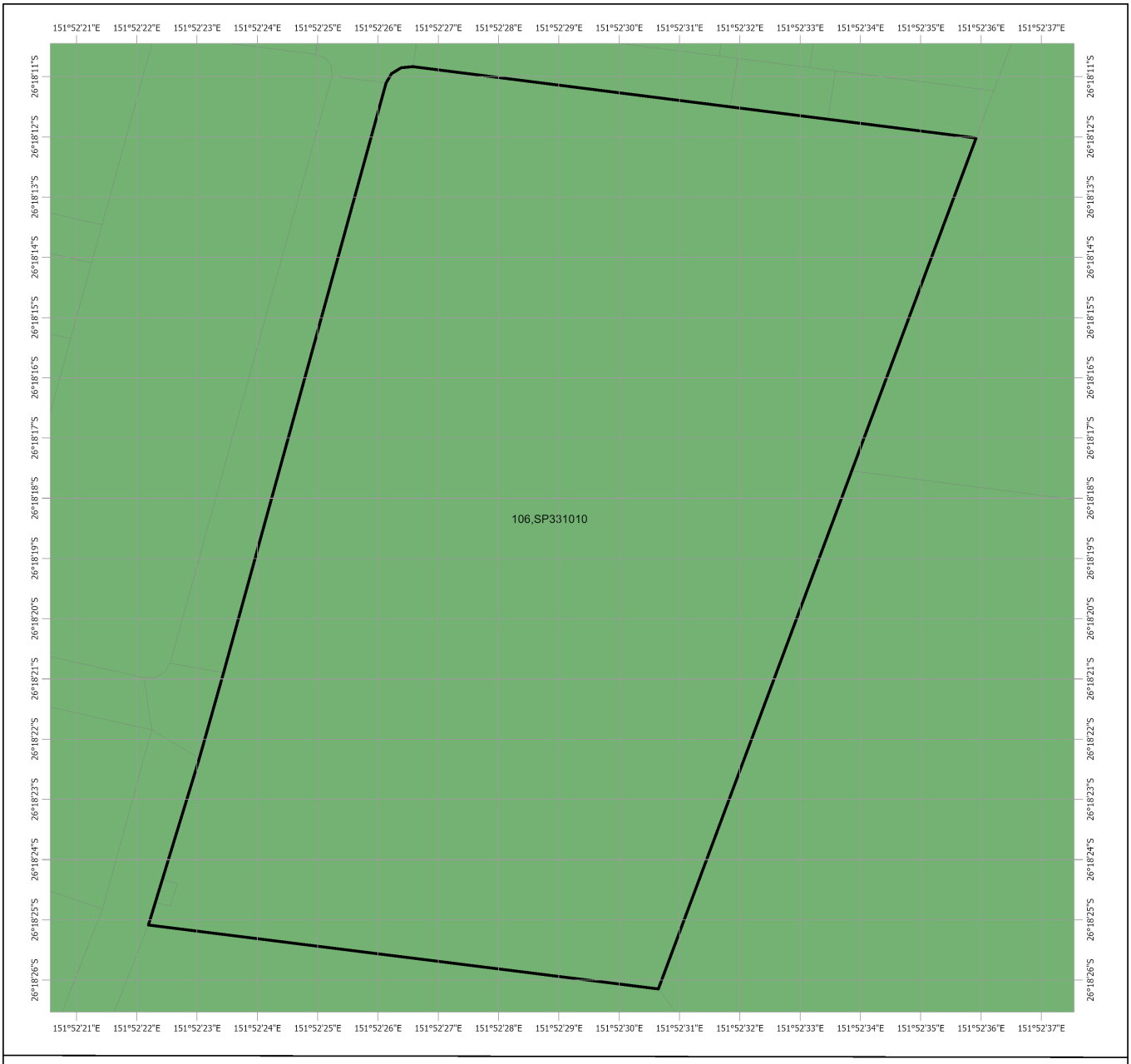

Coastal/Non Coastal Map

Coastal
Non Coastal
Other land parcel boundaries
Selected Lot and Plan

LOCALITY DIAGRAM

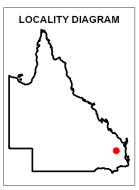

Disclaimer:
While every care is taken to ensure the accuracy of this product, the Department of Resources makes no representations or warranties about its accuracy, reliability, completeness or suitability for any particular purpose and disclaims all responsibility and all liability (including without limitation, liability in negligence) for all expenses, losses, damages (including indirect or consequential damage) and costs which you might incur as a result of the product being inaccurate or incomplete in any way and for any reason.

Land parcel boundaries shown are provided as a locational aid only.

N

0 29 58 87 116 145 m

This product is displayed in:
GDA2020

© The State of Queensland (Department of Resources), 2025

4.4 Agricultural Land Class A or B as per State Planning Policy: State Interest for Agriculture

Agricultural Land Class A or B
as per State Planning Policy: State Interest for Agriculture

- Towns
- Rivers and creeks
- Freeways / motorways; Highways
- Secondary roads; Streets

Agricultural land class A or B

- A
- B
- Not class A or B
- Selected Lot and Plan

LOCALITY DIAGRAM

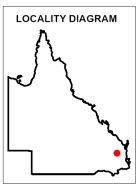

N

0 29 58 87 116 145 m

This product is displayed in GDA2020

Disclaimer
Whilst every care is taken to ensure the accuracy of these details all data custodians and/or the State of Queensland makes no representations or warranties about its accuracy, reliability, completeness or suitability for any particular purpose and disclaims all responsibility and all liability (including without limitation, liability in negligence) for all expenses, losses damages (including indirect or consequential damage) and costs to which you might incur as a result of the data being inaccurate or incomplete in any way and for any reason.

© The State of Queensland, 2025

5. Protected plants framework (administered by the Department of Environment, Science and Innovation (DESI))

In Queensland, all plants that are native to Australia are protected plants under the *Nature Conservation Act 1992* (NCA). The NCA regulates the clearing of protected plants 'in the wild' (see Operational policy: When a protected plant in Queensland is considered to be 'in the wild') that are listed as critically endangered, endangered, vulnerable or near threatened under the Act.

Please note that the protected plant clearing framework applies irrespective of the classification of the vegetation under the *Vegetation Management Act 1999* and any approval or exemptions given under another Act, for example, the *Vegetation Management Act 1999* or *Planning Regulation 2017*.

5.1 Clearing in high risk areas on the flora survey trigger map

The flora survey trigger map identifies high-risk areas for threatened and near threatened plants. These are areas where threatened or near threatened plants are known to exist or are likely to exist based on the habitat present. The flora survey trigger map for this property is provided in section 5.5.

If you are proposing to clear an area shown as high risk on the flora survey trigger map, a flora survey of the clearing impact area must be undertaken by a suitably qualified person in accordance with the Flora survey guidelines. The main objective of a flora survey is to locate any threatened or near threatened plants that may be present in the clearing impact area.

If the flora survey identifies that threatened or near threatened plants are not present within the clearing impact area or clearing within 100m of EVNT plants can be avoided, the clearing activity is exempt from a permit. An exempt clearing notification form must be submitted to the Department of Environment, Science and Innovation, with a copy of the flora survey report, at least one week prior to clearing.

If the flora survey identifies that threatened or near threatened plants are present in, or within 100m of, the area to be cleared, a clearing permit is required before any clearing is undertaken. The flora survey report, as well as an impact management report, must be submitted with the clearing permit application form.

5.2 Clearing outside high risk areas on the flora survey trigger map

In an area other than a high risk area, a clearing permit is only required where a person is, or becomes aware that threatened or near threatened plantsare present in, or within 100m of, the area to be cleared. You must keep a copy of the flora survey trigger map for the area subject to clearing for five years from the day the clearing starts. If you do not clear within the 12 month period that the flora survey trigger map was printed, you need to print and check a new flora survey trigger map.

5.3 Exemptions

Many activities are 'exempt' under the protected plant clearing framework, which means that clearing of native plants that are in the wild can be undertaken for these activities with no need for a flora survey or a protected plant clearing permit. The Information sheet - General exemptions for the take of protected plants provides some of these exemptions.

Some exemptions under the NCA are the same as exempt clearing work (formerly known as exemptions) under the *Vegetation Management Act 1999* (i.e. listed in Schedule 21 of the Planning Regulations 2017) while some are different.

5.4 Contact information for DESI

For further information on the protected plants framework:
Phone 1300 130 372 (and select option four)
Email palm@des.qld.gov.au
Visit https://www.qld.gov.au/environment/plants-animals/plants/protected-plants

5.5 Protected plants flora survey trigger map

This map included may also be requested individually at: https://apps.des.qld.gov.au/map-request/flora-survey-trigger/.

Updates to the data informing the flora survey trigger map

The flora survey trigger map will be reviewed, and updated if necessary, at least every 12 months to ensure the map reflects the most up-to-date and accurate data available.

Species information

Please note that flora survey trigger maps do not identify species associated with 'high risk areas'. While some species information may be publicly available, for example via the Queensland Spatial Catalogue, the Department of Environment, Science and Innovation does not provide species information on request. Regardless of whether species information is available for a particular high risk area, clearing plants in a high risk area may require a flora survey and/or clearing permit. Please see the Department of Environment, Science and Innovation webpage on the clearing of protected plants for more information.

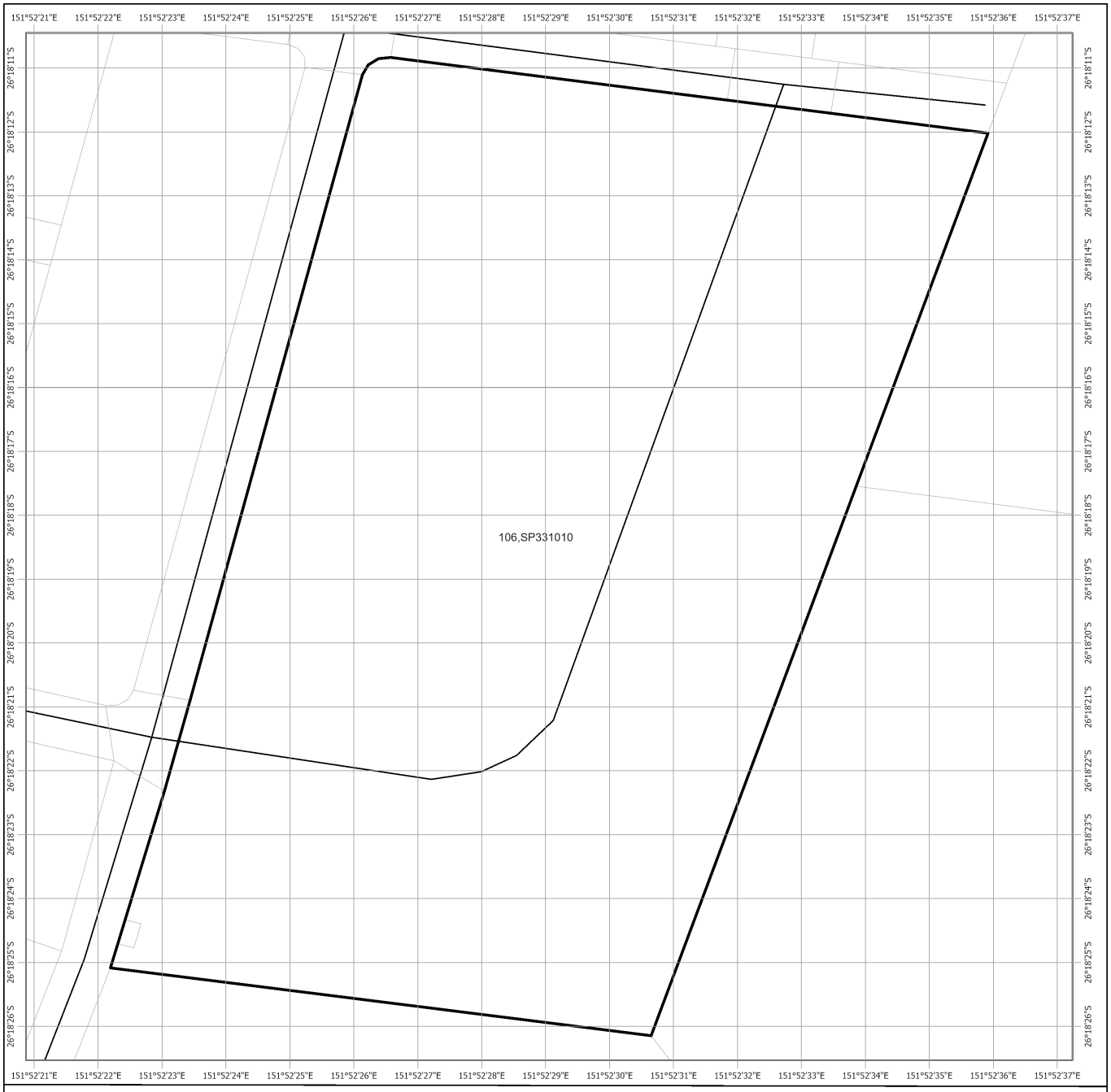

Protected Plants Flora Survey Trigger Map

High risk area
Other land parcel boundaries
Freeways / motorways / highways
Secondary roads / streets
Selected Lot and Plan

LOCALITY DIAGRAM

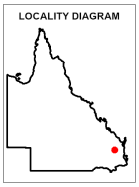

N

0 19 38 57 76 95 m

This product is displayed in:
GDA2020

This map shows areas where particular provisions of the Nature Conservation Act 1992 apply to the clearing of protected plants.

Land parcel boundaries are provided as locational aid only.

This map is produced at a scale relevant to the size of the area selected and should be printed as A4 size in portrait orientation.

For further information or assistance with interpretation of this product, please contact the Department of the Environment, Tourism, Science and Innovation at palm@des.qld.gov.au

Disclaimer: While every care is taken to ensure the accuracy of the data used to generate this product, the Queensland Government makes no representations or warranties about its accuracy, reliability, completeness or suitability for any particular purpose and disclaim all responsibility and all liability (including without limitation, liability in negligence) for all expenses, losses, damages (including indirect or consequential damages) and costs which might be incurred as a consequence of reliance on the data, or as a result of the data being inaccurate or incomplete in any way and for any reason.

© The State of Queensland (Department of the Environment, Tourism, Science and Innovation), 2025

6. Koala protection framework (administered by the Department of Environment, Science and Innovation (DESI))

The koala (*Phascolarctos cinereus*) is listed in Queensland as endangered by the Queensland Government under *Nature Conservation Act 1992* and by the Australian Government under the *Environment Protection and Biodiversity Conservation Act 1999*.

The Queensland Government's koala protection framework is comprised of the *Nature Conservation Act 1992*, the Nature Conservation (Animals) Regulation 2020, the Nature Conservation (Koala) Conservation Plan 2017, the *Planning Act 2016* and the Planning Regulation 2017.

6.1 Koala mapping

6.1.1 Koala districts

The parts of Queensland where koalas are known to occur has been divided into three koala districts - koala district A, koala district B and koala district C. Each koala district is made up of areas with comparable koala populations (e.g. density, extent and significance of threatening processes affecting the population) which require similar management regimes.

Section 7.1 identifies which koala district your property is located in.

6.1.2 Koala habitat areas

Koala habitat areas are areas of vegetation that have been determined to contain koala habitat that is essential for the conservation of a viable koala population in the wild based on the combination of habitat suitability and biophysical variables with known relationships to koala habitat (e.g. landcover, soil, terrain, climate and ground water). In order to protect this important koala habitat, clearing controls have been introduced into the Planning Regulation 2017 for development in koala habitat areas.

Please note that koala habitat areas only exist in koala district A which is the South East Queensland "Shaping SEQ" Regional Plan area. These areas include the local government areas of Brisbane, Gold Coast, Logan, Lockyer Valley, Ipswich, Moreton Bay, Noosa, Redland, Scenic Rim, Somerset, Sunshine Coast and Toowoomba (urban extent).

There are two different categories of koala habitat area (core koala habitat area and locally refined koala habitat), which have been determined using two different methodologies. These methodologies are described in the document Spatial modelling in South East Queensland.

Section 7.2 shows any koala habitat area that exists on your property.

Under the Nature Conservation (Koala) Conservation Plan 2017, an owner of land (or a person acting on the owner's behalf with written consent) can request to make, amend or revoke a koala habitat area determination if they believe, on reasonable grounds, that the existing determination for all or part of their property is incorrect.

More information on requests to make, amend or revoke a koala habitat area determination can be found in the document Guideline - Requests to make, amend or revoke a koala habitat area determination.

The koala habitat area map will be updated at least annually to include any koala habitat areas that have been made, amended or revoked.

Changes to the koala habitat area map which occur between annual updates because of a request to make, amend or revoke a koala habitat area determination can be viewed on the register of approved requests to make, amend or revoke a koala habitat area available at: https://environment.des.qld.gov.au/wildlife/animals/living-with/koalas/mapping/koalamaps. The register includes the lot on plan for the change, the date the decision was made and the map issued to the landholder that shows areas determined to be koala habitat areas.

6.1.3 Koala priority areas

Koala priority areas are large, connected areas that have been determined to have the highest likelihood of achieving conservation outcomes for koalas based on the combination of habitat suitability, biophysical variables with known relationships to koala habitat (e.g. landcover, soil, terrain, climate and ground water) and a koala conservation cost benefit analysis.

Conservation efforts will be prioritised in these areas to ensure the conservation of viable koala populations in the wild including a focus on management (e.g. habitat protection, habitat restoration and threat mitigation) and monitoring. This includes a prohibition on clearing in koala habitat areas that are in koala priority areas under the Planning Regulation 2017 (subject to some exemptions).

Please note that koala priority areas only exist in koala district A which is the South East Queensland "Shaping SEQ" Regional Plan area. These areas include the local government areas of Brisbane, Gold Coast, Logan, Lockyer Valley, Ipswich, Moreton Bay, Noosa, Redland, Scenic Rim, Somerset, Sunshine Coast and Toowoomba (urban extent).

Section 7.2 identifies if your property is in a koala priority area.

6.1.4 Identified koala broad-hectare areas

There are seven identified koala broad-hectare areas in SEQ. These are areas of koala habitat that are located in areas committed to meet development targets in the SEQ Regional Plan to accommodate SEQ's growing population including bring-forward Greenfield sites under the Queensland Housing Affordability Strategy and declared master planned areas under the repealed *Sustainable Planning Act 2009* and the repealed *Integrated Planning Act 1997*.

Specific assessment benchmarks apply to development applications for development proposed in identified koala broad-hectare areas to ensure koala conservation measures are incorporated into the proposed development.

Section 7.2 identifies if your property is in an identified koala broad-hectare area.

6.2 Koala habitat planning controls

On 7 February 2020, the Queensland Government introduced new planning controls to the Planning Regulation 2017 to strengthen the protection of koala habitat in South East Queensland (i.e. koala district A).

More information on these planning controls can be found here:
https://environment.des.qld.gov.au/wildlife/animals/living-with/koalas/mapping/legislation-policy.

As a high-level summary, the koala habitat planning controls make:

- development that involves interfering with koala habitat (defined below) in an area that is both a koala priority area and a koala habitat area, prohibited development (i.e. development for which a development application cannot be made);
- development that involves interfering with koala habitat (defined below) in an area that is a koala habitat area but is not a koala priority area, assessable development (i.e. development for which development approval is required); and
- development that is for extractive industries where the development involves interfering with koala habitat (defined below) in an area that is both a koala habitat area and a key resource area, assessable development (i.e. development for which development approval is required).

Interfering with koala habitat means:

1. Removing, cutting down, ringbarking, pushing over, poisoning or destroying in anyway, including by burning, flooding or draining native vegetation in a koala habitat area; but
2. Does not include destroying standing vegetation stock or lopping a tree.

However, these planning controls do not apply if the development is exempted development as defined in Schedule 24 of the Planning Regulation 2017. More information on exempted development can be found here:
https://environment.des.qld.gov.au/wildlife/animals/living-with/koalas/mapping/legislation-policy.

There are also assessment benchmarks that apply to development applications for:

- building works, operational works, material change of use or reconfiguration of a lot where:

  - the local government planning scheme makes the development assessable;
  - the premises includes an area that is both a koala priority area and a koala habitat area; and
  - the development does not involve interfering with koala habitat (defined above); and

- development in identified koala broad-hectare areas.

The Guideline - Assessment Benchmarks in relation to Koala Habitat in South East Queensland assessment benchmarks outlines these assessment benchmarks, the intent of these assessment benchmarks and advice on how proposed development may meet these assessment benchmarks.

6.3 Koala Conservation Plan clearing requirements

Section 10 and 11 of the Nature Conservation (Koala) Conservation Plan 2017 prescribes requirements that must be met when clearing koala habitat in koala district A and koala district B.

These clearing requirements are independent to the koala habitat planning controls introduced into the Planning Regulation 2017, which means they must be complied with irrespective of any approvals or exemptions offered under other legislation.

Unlike the clearing controls prescribed in the Planning Regulation 2017 that are to protect koala habitat, the clearing requirements prescribed in the Nature Conservation (Koala) Conservation Plan 2017 are in place to prevent the injury or death of koalas when koala habitat is being cleared.

6.4 Contact information for DESI

For further information on the koala protection framework:
Phone 13 QGOV (13 74 68)
Email koala.assessment@des.qld.gov.au
Visit https://environment.des.qld.gov.au/wildlife/animals/living-with/koalas/mapping

7. Koala protection framework details for Lot: 106 Plan: SP331010

7.1 Koala districts

Koala District C

7.2 Koala priority area, koala habitat area and identified koala broad-hectare map

Koala priority area, koala habitat area and identified koala broad-hectare area map

- Koala habitat area (core)
- Koala habitat area (locally refined)
- Koala priority area
- Identified koala broad-hectare area
- Cadastral Boundaries
- Towns
- Major rivers/creeks
- Highway
- Connector
- Street/Local Road
- Queensland
- Selected Lot and Plan

The koala habitat mapping within South East Queensland uses regional ecosystem linework compiled at a scale varying from 1:25,000 to 1:100,000. Linework should be used as a guide only. The positional accuracy of regional ecosystem data mapped at a scale of 1:100,000 is +/- 100 metres.

© The State of Queensland, 2025

LOCALITY DIAGRAM

N

0 25 50 75 100 125 m

This product is displayed in GDA2020

Disclaimer:
While every care is taken to ensure the accuracy of this product, the Department of Environment, Science and Innovation acting on behalf of the State of Queensland makes no representations or warranties about its accuracy, reliability, completeness or suitability for any particular purpose and disclaims all responsibility and all liability (including without limitation, liability in negligence) for all expenses, losses, damages (including indirect or consequential damage) and costs which you might incur as a result of the data being inaccurate or incomplete in any way and for any reason. Due to varying sources of data, spatial locations may not coincide when overlaid.

The koala conservation plan maps will be updated at least annually to include any koala habitat areas that have been made, amended or revoked.

In order to ensure that the most recent map for an area of interest can be accessed, prior to the annual update, a register of changes made to koala habitat areas as a result of the map amendment process will be available at: https://environment.des.qld.gov.au/wildlife/animals/living-with/koalas/mapping/. The register will include lot on plan for the change, the date the decision was made and the map issued to the landholder which shows areas determined to be koala habitat areas.

7.3 Koala habitat regional ecosystems for core koala habitat areas

Koala habitat regional ecosystems for core koala habitat areas

Koala habitat area (core)
Towns
Highway
Connector
Street/Local Road
Major rivers/creeks
Queensland
Selected Lot and Plan

LOCALITY DIAGRAM

N

0 25 50 75 100 125 m

This product is displayed in GDA2020

DISCLAIMER:

While every care is taken to ensure the accuracy of this product, the Department of Environment, Science and Innovation acting on behalf of the State of Queensland makes no representations or warranties about its accuracy, reliability, completeness or suitability for any particular purpose and disclaims all responsibility and all liability (including without limitation, liability in negligence) for all expenses, losses, damages (including indirect or consequential damage) and costs which you might incur as a result of the data being inaccurate or incomplete in any way and for any reason.
Due to varying sources of data, spatial locations may not coincide when overlaid.

The koala habitat mapping within South East Queensland uses regional ecosystem linework compiled at a scale varying from 1:25,000 to 1:100,000. Linework should be used as a guide only. The positional accuracy of regional ecosystem data mapped at a scale of 1:100,000 is +/- 100 metres.

© The State of Queensland, 2025

8. Other relevant legislation contacts list

Activity	Legislation	Agency	Contact details
Interference with overland flow	*Water Act 2000*	Queensland Department of Regional Development, Manufacturing and Water	Ph: 13 QGOV (13 74 68) www.rdmw.qld.gov.au
Earthworks, significant disturbance	*Soil Conservation Act 1986*	Queensland Department of Resources	Ph: 13 QGOV (13 74 68) www.resources.qld.gov.au
Fire Permits	*Fire and Emergency Services Act 1990*	Queensland Fire Department	Ph: 13 QGOV (13 74 68) www.fire.qld.gov.au
Indigenous Cultural Heritage	*Aboriginal Cultural Heritage Act 2003* *Torres Strait Islander Cultural Heritage Act 2003*	Queensland Department of Treaty, Aboriginal and Torres Strait Islander Partnerships, Communites and the Arts	Ph: 13 QGOV (13 74 68) www.dsdsatsip.qld.gov.au
Mining and environmentally relevant activities Infrastructure development (coastal) Heritage issues	*Environmental Protection Act 1994* *Coastal Protection and Management Act 1995* *Queensland Heritage Act 1992*	Queensland Department of Environment, Science and Innovation	Ph: 13 QGOV (13 74 68) www.desi.qld.gov.au
Protected plants and protected areas	*Nature Conservation Act 1992* *Planning Act 2016*	Queensland Department of Environment, Science and Innovation	Ph: 1300 130 372 (option 4) palm@des.qld.gov.au www.desi.qld.gov.au
Koala mapping and regulations	*Nature Conservation Act 1992*	Queensland Department of Environment, Science and Innovation	Ph: 13 QGOV (13 74 68) Koala.assessment@des.qld.gov.au
Interference with fish passage in a watercourse, mangroves Forestry activities	*Fisheries Act 1994* *Forestry Act 1959*	Queensland Department of Agriculture and Fisheries	Ph: 13 QGOV (13 74 68) www.daf.qld.gov.au
Matters of National Environmental Significance including listed threatened species and ecological communities	*Environment Protection and Biodiversity Conservation Act 1999*	Department of Climate Change, Energy, the Environment and Water (Australian Government)	Ph: 1800 803 772 www.dcceew.gov.au
Development and planning processes	*Planning Act 2016* *State Development and Public Works Organisation Act 1971*	Queensland Department of Housing, Local Government, Planning and Public Works	Ph: 13 QGOV (13 74 68) www.planning.qld.gov.au
Coordinated projects	*Planning Act 2016* *State Development and Public Works Organisation Act 1971*	Office of the Coordinator-General	Ph: 13 QGOV (13 74 68) www.statedevelopment.qld.gov.au/coordinator-general
Wet Tropics World Heritage Area	*Wet Tropics World Heritage Protection and Management Act 1993*	Queensland Wet Tropics Management Authority	Ph: (07) 4241 0500 www.wettropics.gov.au
Requirements on State controlled road	*Transport Infrastructure Act 1994*	Queensland Department of Transport and Main Roads	Ph: 13 QGOV (13 74 68) https://www.tmr.qld.gov.au
Local government requirements	*Local Government Act 2009* *Planning Act 2016*	Your relevant local government office	

EPBC Act Protected Matters Report

This report provides general guidance on matters of national environmental significance and other matters protected by the EPBC Act in the area you have selected. Please see the caveat for interpretation of information provided here.

Report created: 14-Feb-2025

Summary
Details
- Matters of NES
- Other Matters Protected by the EPBC Act
- Extra Information

Caveat
Acknowledgements

Summary

Matters of National Environment Significance

This part of the report summarises the matters of national environmental significance that may occur in, or may relate to, the area you nominated. Further information is available in the detail part of the report, which can be accessed by scrolling or following the links below. If you are proposing to undertake an activity that may have a significant impact on one or more matters of national environmental significance then you should consider the Administrative Guidelines on Significance.

World Heritage Properties:	None
National Heritage Places:	None
Wetlands of International Importance (Ramsar	None
Great Barrier Reef Marine Park:	None
Commonwealth Marine Area:	None
Listed Threatened Ecological Communities:	3
Listed Threatened Species:	45
Listed Migratory Species:	9

Other Matters Protected by the EPBC Act

This part of the report summarises other matters protected under the Act that may relate to the area you nominated. Approval may be required for a proposed activity that significantly affects the environment on Commonwealth land, when the action is outside the Commonwealth land, or the environment anywhere when the action is taken on Commonwealth land. Approval may also be required for the Commonwealth or Commonwealth agencies proposing to take an action that is likely to have a significant impact on the environment anywhere.

The EPBC Act protects the environment on Commonwealth land, the environment from the actions taken on Commonwealth land, and the environment from actions taken by Commonwealth agencies. As heritage values of a place are part of the 'environment', these aspects of the EPBC Act protect the Commonwealth Heritage values of a Commonwealth Heritage place. Information on the new heritage laws can be found at https://www.dcceew.gov.au/parks-heritage/heritage

A permit may be required for activities in or on a Commonwealth area that may affect a member of a listed threatened species or ecological community, a member of a listed migratory species, whales and other cetaceans, or a member of a listed marine species.

Commonwealth Lands:	1
Commonwealth Heritage Places:	None
Listed Marine Species:	20
Whales and Other Cetaceans:	None
Critical Habitats:	None
Commonwealth Reserves Terrestrial:	None
Australian Marine Parks:	None
Habitat Critical to the Survival of Marine Turtles:	None

Extra Information

This part of the report provides information that may also be relevant to the area you have

State and Territory Reserves:	None
Regional Forest Agreements:	None
Nationally Important Wetlands:	None
EPBC Act Referrals:	2
Key Ecological Features (Marine):	None
Biologically Important Areas:	None
Bioregional Assessments:	None
Geological and Bioregional Assessments:	None

Details

Matters of National Environmental Significance

Listed Threatened Ecological Communities [Resource Information]

For threatened ecological communities where the distribution is well known, maps are derived from recovery plans, State vegetation maps, remote sensing imagery and other sources. Where threatened ecological community distributions are less well known, existing vegetation maps and point location data are used to produce indicative distribution maps.
Status of Vulnerable, Disallowed and Ineligible are not MNES under the EPBC Act.

Community Name	Threatened Category	Presence Text	Buffer Status
Lowland Rainforest of Subtropical Australia	Critically Endangered	Community may occur within area	In feature area
Poplar Box Grassy Woodland on Alluvial Plains	Endangered	Community may occur within area	In feature area
White Box-Yellow Box-Blakely's Red Gum Grassy Woodland and Derived Native Grassland	Critically Endangered	Community likely to occur within area	In feature area

Listed Threatened Species [Resource Information]

Status of Conservation Dependent and Extinct are not MNES under the EPBC Act.
Number is the current name ID.

Scientific Name	Threatened Category	Presence Text	Buffer Status
BIRD			
Calidris acuminata Sharp-tailed Sandpiper [874]	Vulnerable	Species or species habitat may occur within area	In feature area
Calidris ferruginea Curlew Sandpiper [856]	Critically Endangered	Species or species habitat may occur within area	In feature area
Calyptorhynchus lathami lathami South-eastern Glossy Black-Cockatoo [67036]	Vulnerable	Species or species habitat may occur within area	In feature area
Cyclopsitta diophthalma coxeni Coxen's Fig-Parrot [59714]	Critically Endangered	Species or species habitat may occur within area	In buffer area only

Scientific Name	Threatened Category	Presence Text	Buffer Status
Erythrotriorchis radiatus Red Goshawk [942]	Endangered	Species or species habitat likely to occur within area	In feature area
Falco hypoleucos Grey Falcon [929]	Vulnerable	Species or species habitat may occur within area	In feature area
Gallinago hardwickii Latham's Snipe, Japanese Snipe [863]	Vulnerable	Species or species habitat likely to occur within area	In feature area
Geophaps scripta scripta Squatter Pigeon (southern) [64440]	Vulnerable	Species or species habitat may occur within area	In feature area
Grantiella picta Painted Honeyeater [470]	Vulnerable	Species or species habitat likely to occur within area	In feature area
Hirundapus caudacutus White-throated Needletail [682]	Vulnerable	Species or species habitat known to occur within area	In feature area
Lathamus discolor Swift Parrot [744]	Critically Endangered	Species or species habitat may occur within area	In feature area
Rostratula australis Australian Painted Snipe [77037]	Endangered	Species or species habitat likely to occur within area	In feature area
Stagonopleura guttata Diamond Firetail [59398]	Vulnerable	Species or species habitat may occur within area	In feature area
Turnix melanogaster Black-breasted Button-quail [923]	Vulnerable	Species or species habitat likely to occur within area	In feature area
FISH			
Neoceratodus forsteri Australian Lungfish, Queensland Lungfish [67620]	Vulnerable	Species or species habitat may occur within area	In buffer area only
MAMMAL			

Scientific Name	Threatened Category	Presence Text	Buffer Status
[Chalinolobus dwyeri](#) Large-eared Pied Bat, Large Pied Bat [183]	Endangered	Species or species habitat may occur within area	In feature area
[Dasyurus hallucatus](#) Northern Quoll, Digul [Gogo-Yimidir], Wijingadda [Dambimangari], Wiminji [Martu] [331]	Endangered	Species or species habitat likely to occur within area	In feature area
[Macroderma gigas](#) Ghost Bat [174]	Vulnerable	Species or species habitat may occur within area	In feature area
[Nyctophilus corbeni](#) Corben's Long-eared Bat, South-eastern Long-eared Bat [83395]	Vulnerable	Species or species habitat may occur within area	In feature area
[Petauroides volans](#) Greater Glider (southern and central) [254]	Endangered	Species or species habitat likely to occur within area	In feature area
[Petaurus australis australis](#) Yellow-bellied Glider (south-eastern) [87600]	Vulnerable	Species or species habitat likely to occur within area	In feature area
[Phascolarctos cinereus (combined populations of Qld, NSW and the ACT)](#) Koala (combined populations of Queensland, New South Wales and the Australian Capital Territory) [85104]	Endangered	Species or species habitat known to occur within area	In feature area
[Pteropus poliocephalus](#) Grey-headed Flying-fox [186]	Vulnerable	Foraging, feeding or related behaviour may occur within area	In feature area
PLANT			
[Acacia grandifolia](#) [3566]	Vulnerable	Species or species habitat may occur within area	In feature area
[Arthraxon hispidus](#) Hairy-joint Grass [9338]	Vulnerable	Species or species habitat may occur within area	In feature area

Scientific Name	Threatened Category	Presence Text	Buffer Status
Cadellia pentastylis Ooline [9828]	Vulnerable	Species or species habitat likely to occur within area	In feature area
Coleus omissus listed as Plectranthus omissus [91381]	Endangered	Species or species habitat may occur within area	In feature area
Cossinia australiana Cossinia [3066]	Endangered	Species or species habitat likely to occur within area	In feature area
Denhamia parvifolia Small-leaved Denhamia [18106]	Vulnerable	Species or species habitat likely to occur within area	In feature area
Dichanthium setosum bluegrass [14159]	Vulnerable	Species or species habitat likely to occur within area	In feature area
Haloragis exalata subsp. velutina Tall Velvet Sea-berry [16839]	Vulnerable	Species or species habitat may occur within area	In feature area
Leuzea australis listed as Rhaponticum australe Austral Cornflower, Native Thistle [9363]	Vulnerable	Species or species habitat likely to occur within area	In feature area
Macadamia integrifolia Macadamia Nut, Queensland Nut Tree, Smooth-shelled Macadamia, Bush Nut, Nut Oak [7326]	Vulnerable	Species or species habitat may occur within area	In buffer area only
Paspalidium grandispiculatum a grass [10838]	Vulnerable	Species or species habitat may occur within area	In buffer area only
Phebalium distans Mt Berryman Phebalium [81869]	Endangered	Species or species habitat likely to occur within area	In feature area
Picris evae Hawkweed [10839]	Vulnerable	Species or species habitat may occur within area	In buffer area only

Scientific Name	Threatened Category	Presence Text	Buffer Status
Polianthion minutiflorum [82772]	Vulnerable	Species or species habitat may occur within area	In feature area
Samadera bidwillii Quassia [29708]	Vulnerable	Species or species habitat may occur within area	In buffer area only
Thesium australe Austral Toadflax, Toadflax [15202]	Vulnerable	Species or species habitat may occur within area	In feature area
REPTILE			
Anomalopus mackayi Five-clawed Worm-skink, Long-legged Worm-skink [25934]	Vulnerable	Species or species habitat may occur within area	In feature area
Delma torquata Adorned Delma, Collared Delma [1656]	Vulnerable	Species or species habitat may occur within area	In feature area
Egernia rugosa Yakka Skink [1420]	Vulnerable	Species or species habitat may occur within area	In feature area
Elseya albagula Southern Snapping Turtle, White-throated Snapping Turtle [81648]	Critically Endangered	Species or species habitat likely to occur within area	In feature area
Furina dunmalli Dunmall's Snake [59254]	Vulnerable	Species or species habitat may occur within area	In feature area
Hemiaspis damelii Grey Snake [1179]	Endangered	Species or species habitat likely to occur within area	In feature area

Listed Migratory Species		[Resource Information]	
Scientific Name	Threatened Category	Presence Text	Buffer Status
Migratory Marine Birds			
Apus pacificus Fork-tailed Swift [678]		Species or species habitat likely to occur within area	In feature area
Migratory Terrestrial Species			

Scientific Name	Threatened Category	Presence Text	Buffer Status
[Cuculus optatus](#) Oriental Cuckoo, Horsfield's Cuckoo [86651]		Species or species habitat may occur within area	In feature area
[Hirundapus caudacutus](#) White-throated Needletail [682]	Vulnerable	Species or species habitat known to occur within area	In feature area
[Motacilla flava](#) Yellow Wagtail [644]		Species or species habitat may occur within area	In feature area
Migratory Wetlands Species			
[Actitis hypoleucos](#) Common Sandpiper [59309]		Species or species habitat may occur within area	In feature area
[Calidris acuminata](#) Sharp-tailed Sandpiper [874]	Vulnerable	Species or species habitat may occur within area	In feature area
[Calidris ferruginea](#) Curlew Sandpiper [856]	Critically Endangered	Species or species habitat may occur within area	In feature area
[Calidris melanotos](#) Pectoral Sandpiper [858]		Species or species habitat may occur within area	In feature area
[Gallinago hardwickii](#) Latham's Snipe, Japanese Snipe [863]	Vulnerable	Species or species habitat likely to occur within area	In feature area

Other Matters Protected by the EPBC Act

Commonwealth Lands [Resource Information]

The Commonwealth area listed below may indicate the presence of Commonwealth land in this vicinity. Due to the unreliability of the data source, all proposals should be checked as to whether it impacts on a Commonwealth area, before making a definitive decision. Contact the State or Territory government land department for further information.

Commonwealth Land Name	State	Buffer Status
Defence		
Defence - WONDAI TRAINING DEPOT [31846]	QLD	In buffer area only

Listed Marine Species [Resource Information]

Scientific Name	Threatened Category	Presence Text	Buffer Status
Bird			
Actitis hypoleucos Common Sandpiper [59309]		Species or species habitat may occur within area	In feature area
Anseranas semipalmata Magpie Goose [978]		Species or species habitat may occur within area overfly marine area	In feature area
Apus pacificus Fork-tailed Swift [678]		Species or species habitat likely to occur within area overfly marine area	In feature area
Bubulcus ibis as Ardea ibis Cattle Egret [66521]		Species or species habitat may occur within area overfly marine area	In feature area
Calidris acuminata Sharp-tailed Sandpiper [874]	Vulnerable	Species or species habitat may occur within area	In feature area
Calidris ferruginea Curlew Sandpiper [856]	Critically Endangered	Species or species habitat may occur within area overfly marine area	In feature area
Calidris melanotos Pectoral Sandpiper [858]		Species or species habitat may occur within area overfly marine area	In feature area
Chalcites osculans as Chrysococcyx osculans Black-eared Cuckoo [83425]		Species or species habitat likely to occur within area overfly marine area	In feature area
Gallinago hardwickii Latham's Snipe, Japanese Snipe [863]	Vulnerable	Species or species habitat likely to occur within area overfly marine area	In feature area
Haliaeetus leucogaster White-bellied Sea-Eagle [943]		Species or species habitat likely to occur within area	In feature area

Scientific Name	Threatened Category	Presence Text	Buffer Status
Hirundapus caudacutus White-throated Needletail [682]	Vulnerable	Species or species habitat known to occur within area overfly marine area	In feature area
Lathamus discolor Swift Parrot [744]	Critically Endangered	Species or species habitat may occur within area overfly marine area	In feature area
Merops ornatus Rainbow Bee-eater [670]		Species or species habitat may occur within area overfly marine area	In feature area
Monarcha melanopsis Black-faced Monarch [609]		Species or species habitat likely to occur within area overfly marine area	In feature area
Motacilla flava Yellow Wagtail [644]		Species or species habitat may occur within area overfly marine area	In feature area
Myiagra cyanoleuca Satin Flycatcher [612]		Species or species habitat known to occur within area overfly marine area	In feature area
Pterodroma cervicalis White-necked Petrel [59642]		Species or species habitat may occur within area	In feature area
Rhipidura rufifrons Rufous Fantail [592]		Species or species habitat likely to occur within area overfly marine area	In feature area
Rostratula australis as Rostratula benghalensis (sensu lato) Australian Painted Snipe [77037]	Endangered	Species or species habitat likely to occur within area overfly marine area	In feature area

Scientific Name	Threatened Category	Presence Text	Buffer Status
Symposiachrus trivirgatus as Monarcha trivirgatus			
Spectacled Monarch [83946]		Species or species habitat may occur within area overfly marine area	In feature area

Extra Information

EPBC Act Referrals				[Resource Information]
Title of referral	Reference	Referral Outcome	Assessment Status	Buffer Status
Controlled action				
Barlil Weir	2001/388	Controlled Action	Post-Approval	In buffer area only
Not controlled action				
Improving rabbit biocontrol: releasing another strain of RHDV, sthrn two thirds of Australia	2015/7522	Not Controlled Action	Completed	In feature area

Caveat

1 PURPOSE

This report is designed to assist in identifying the location of matters of national environmental significance (MNES) and other matters protected by the Environment Protection and Biodiversity Conservation Act 1999 (Cth) (EPBC Act) which may be relevant in determining obligations and requirements under the EPBC Act.

The report contains the mapped locations of:

- World and National Heritage properties;
- Wetlands of International and National Importance;
- Commonwealth and State/Territory reserves;
- distribution of listed threatened, migratory and marine species;
- listed threatened ecological communities; and
- other information that may be useful as an indicator of potential habitat value.

2 DISCLAIMER

This report is not intended to be exhaustive and should only be relied upon as a general guide as mapped data is not available for all species or ecological communities listed under the EPBC Act (see below). Persons seeking to use the information contained in this report to inform the referral of a proposed action under the EPBC Act should consider the limitations noted below and whether additional information is required to determine the existence and location of MNES and other protected matters.

Where data is available to inform the mapping of protected species, the presence type (e.g. known, likely or may occur) that can be determined from the data is indicated in general terms. It is the responsibility of any person using or relying on the information in this report to ensure that it is suitable for the circumstances of any proposed use. The Commonwealth cannot accept responsibility for the consequences of any use of the report or any part thereof. To the maximum extent allowed under governing law, the Commonwealth will not be liable for any loss or damage that may be occasioned directly or indirectly through the use of, or reliance on the contents of this report.

3 DATA SOURCES

Threatened ecological communities

For threatened ecological communities where the distribution is well known, maps are generated based on information contained in recovery plans, State vegetation maps and remote sensing imagery and other sources. Where threatened ecological community distributions are less well known, existing vegetation maps and point location data are used to produce indicative distribution maps.

Threatened, migratory and marine species

Threatened, migratory and marine species distributions have been discerned through a variety of methods. Where distributions are well known and if time permits, distributions are inferred from either thematic spatial data (i.e. vegetation, soils, geology, elevation, aspect, terrain, etc.) together with point locations and described habitat; or modelled (MAXENT or BIOCLIM habitat modelling) using point locations and environmental data layers.

Where little information is available for a species or large number of maps are required in a short time-frame, maps are derived either from 0.04 or 0.02 decimal degree cells; by an automated process using polygon capture techniques (static two kilometre grid cells, alpha-hull and convex hull); or captured manually or by using topographic features (national park boundaries, islands, etc.).

In the early stages of the distribution mapping process (1999-early 2000s) distributions were defined by degree blocks, 100K or 250K map sheets to rapidly create distribution maps. More detailed distribution mapping methods are used to update these distributions when time permits.

4 LIMITATIONS

The following species and ecological communities have not been mapped and do not appear in this report:

- threatened species listed as extinct or considered vagrants;
- some recently listed species and ecological communities;
- some listed migratory and listed marine species, which are not listed as threatened species; and
- migratory species that are very widespread, vagrant, or only occur in Australia in small numbers.

The following groups have been mapped, but may not cover the complete distribution of the species:

- listed migratory and/or listed marine seabirds, which are not listed as threatened, have only been mapped for recorded breeding sites; and
- seals which have only been mapped for breeding sites near the Australian continent

The breeding sites may be important for the protection of the Commonwealth Marine environment.

Refer to the metadata for the feature group (using the Resource Information link) for the currency of the information.

Acknowledgements

This database has been compiled from a range of data sources. The department acknowledges the following custodians who have contributed valuable data and advice:

-Office of Environment and Heritage, New South Wales
-Department of Environment and Primary Industries, Victoria
-Department of Primary Industries, Parks, Water and Environment, Tasmania
-Department of Environment, Water and Natural Resources, South Australia
-Department of Land and Resource Management, Northern Territory
-Department of Environmental and Heritage Protection, Queensland
-Department of Parks and Wildlife, Western Australia
-Environment and Planning Directorate, ACT
-Birdlife Australia
-Australian Bird and Bat Banding Scheme
-Australian National Wildlife Collection
-Natural history museums of Australia
-Museum Victoria
-Australian Museum
-South Australian Museum
-Queensland Museum
-Online Zoological Collections of Australian Museums
-Queensland Herbarium
-National Herbarium of NSW
-Royal Botanic Gardens and National Herbarium of Victoria
-Tasmanian Herbarium
-State Herbarium of South Australia
-Northern Territory Herbarium
-Western Australian Herbarium
-Australian National Herbarium, Canberra
-University of New England
-Ocean Biogeographic Information System
-Australian Government, Department of Defence
Forestry Corporation, NSW
-Geoscience Australia
-CSIRO
-Australian Tropical Herbarium, Cairns
-eBird Australia
-Australian Government – Australian Antarctic Data Centre
-Museum and Art Gallery of the Northern Territory
-Australian Government National Environmental Science Program
-Australian Institute of Marine Science
-Reef Life Survey Australia
-American Museum of Natural History
-Queen Victoria Museum and Art Gallery, Inveresk, Tasmania
-Tasmanian Museum and Art Gallery, Hobart, Tasmania
-Other groups and individuals

The Department is extremely grateful to the many organisations and individuals who provided expert advice and information on numerous draft distributions.

Please feel free to provide feedback via the Contact us page.

© Commonwealth of Australia
Department of Climate Change, Energy, the Environment and Water
GPO Box 3090
Canberra ACT 2601 Australia
+61 2 6274 1111

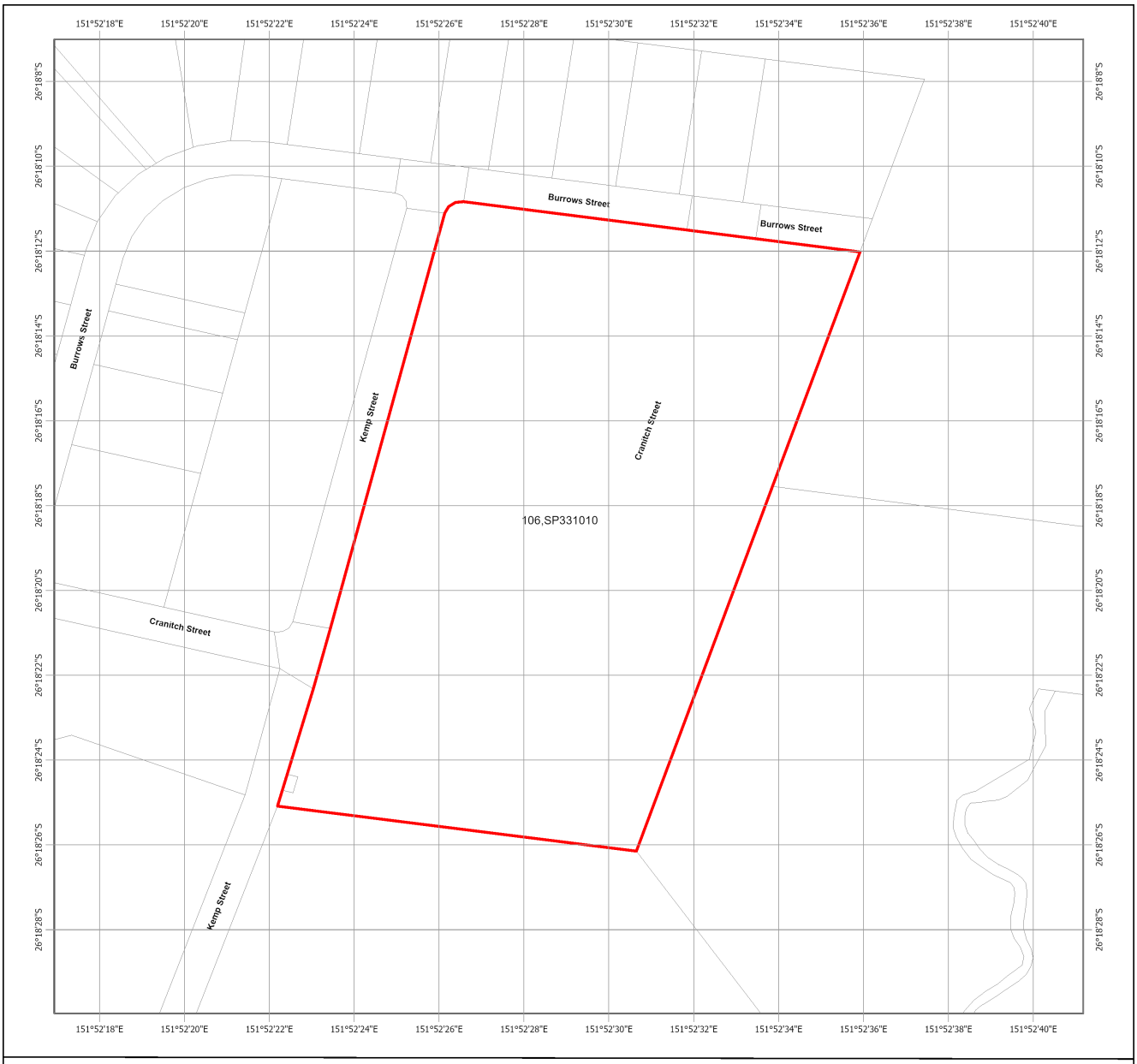

Map of Great Barrier Reef Wetland Protection Areas

Cadastral Boundary
Wetland in a wetland protection area
Great Barrier Reef wetland protection area
Selected Lot and Plan

LOCALITY DIAGRAM

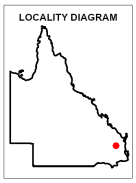

N

0 41 82 123 164 205 m

This product is displayed in GDA2020

Note:
This map shows the location of wetland protection areas which are defined under the Environmental Protection Regulation 2019. Within wetland protection areas, certain types of development involving high impact earthworks are made assessable under the Planning Regulation 2017.

The State Assessment and Referral Agency (SARA) is part of the State government department administering the Planning Act 2016. SARA is the assessment manager for assessable development involving high impact earthworks within wetland protection areas. The Department of the Environment, Tourism, Science and Innovation is a technical agency.

The policy outcome and assessment criteria for assessing these applications are described in the State Development Assessment Provisions (SDAP) State Code 9 : Great Barrier Reef Wetland Protection Areas.

High impact earthworks carried out for electricity operating works or government supported transport infrastructure is accepted development if it complies with schedule 14 of the Planning Regulation 2017.

This map is produced at a scale relevant to the size of the lot on plan identified and should be printed at A4 size in portrait orientation. Consideration of the effects of mapped scale is necessary when interpreting data at a large scale.

For further information or assistance with interpretation of this product, please contact the Department of the Environment, Tourism, Science and Innovation, email planning.support@des.qld.gov.au.

© The State of Queensland, 2025

Queensland Government

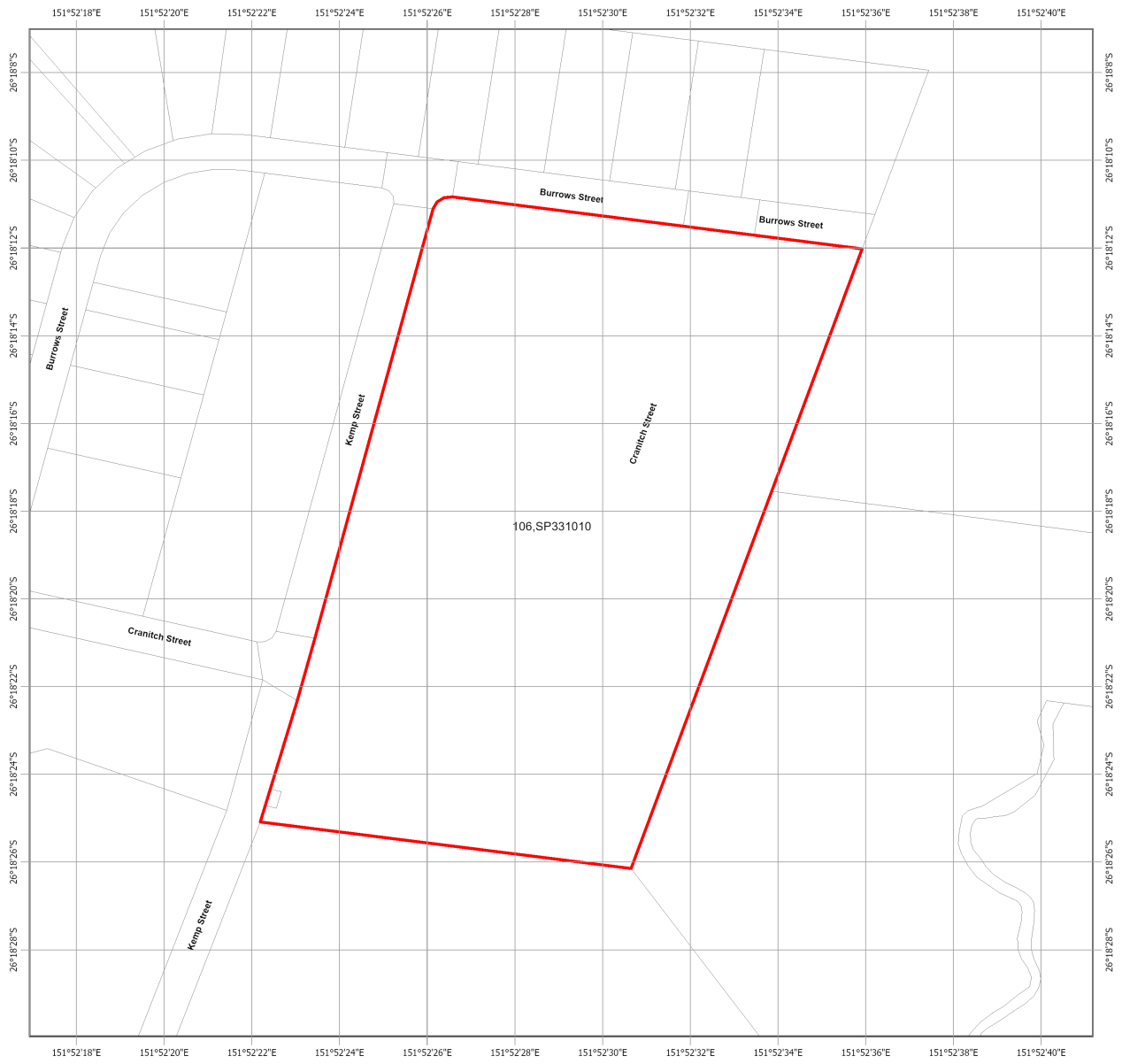

Map of Queensland Wetland Environmental Values

Cadastral Boundary

High ecological values waters management intent

Wetlands assessed under section 7

GBR wetland of high ecological significance

Wetland of high ecological significance

Wetland of general ecological significance

Selected Lot and Plan

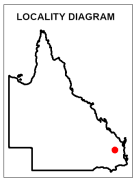

N

Note:
This map shows the location of wetlands on the Map of Queensland Wetland Environmental Values under the Environmental Protection (Wetland and Water Biodiversity) Policy 2019. The map also shows high ecological value waters management intent under Schedule 2 of the Environmental Protection (Water and Wetland Biodiversity) Policy 2019.

Wetlands are assessed for ecological significance using the environmental values for wetlands in section 7 of the Environmental Protection (Wetland and Water Biodiversity) Policy 2019. Wetlands are considered either High Ecological Significance (HES) or of General Ecological Significance (GES) for the purposes of the environmental values.

This map is produced at a scale relevant to the size of the lot on plan identified and should be printed at A4 size in portrait orientation. Consideration of the effects of mapped scale is necessary when interpreting data at a large scale.

For further information or assistance with interpretation of this product, please contact the Department of the Environment, Tourism, Science and Innovation, email planning.support@des.qld.gov.au.

0 41 82 123 164 205 m

This product is displayed in: GDA2020

© The State of Queensland, 2025

Queensland Government

Queensland Government

WildNet species list

Search Criteria: Species List for a Specified Point
Species: All
Type: All
Queensland status: All
Records: All
Date: All
Latitude: -26.3050
Longitude: 151.8747
Distance: 5
Email: maddy.warnick@rangeenviro.com.au
Date submitted: Friday 14 Feb 2025 09:43:16
Date extracted: Friday 14 Feb 2025 09:50:02

The number of records retrieved = 134

Disclaimer
Information presented on this product is distributed by the Queensland Government as an information source only. While every care is taken to ensure the accuracy of this data, the State of Queensland makes no statements, representations or warranties about the accuracy, reliability, completeness or suitability of any information contained in this product.
The State of Queensland disclaims all responsibility for information contained in this product and all liability (including liability in negligence) for all expenses, losses, damages and costs you may incur as a result of the information being inaccurate or incomplete in any way for any reason.
Information about your Species lists request is logged for quality assurance, user support and product enhancement purposes only.
The information provided should be appropriately acknowledged as being derived from WildNet database when it is used. As the WildNet Program is still in a process of collating and vetting data, it is possible the information given is not complete. Go to the WildNet database webpage (https://www.qld.gov.au/environment/plants-animals/species-information/wildnet) to find out more about WildNet and where to access other WildNet information products approved for publication. Feedback about WildNet species lists should be emailed to wildlife.online@des.qld.gov.au.

Kingdom	Class	Family	Scientific Name	Common Name	I	Q	A	Records
animals	amphibians	Bufonidae	*Rhinella marina*	cane toad	Y			5
animals	amphibians	Hylidae	*Litoria balatus*	slender bleating treefrog		C		2
animals	amphibians	Hylidae	*Litoria caerulea*	common green treefrog		C		4
animals	amphibians	Hylidae	*Litoria fallax*	eastern sedgefrog		C		14
animals	amphibians	Hylidae	*Litoria latopalmata*	broad palmed rocketfrog		C		5
animals	amphibians	Hylidae	*Litoria peronii*	emerald spotted treefrog		C		7
animals	amphibians	Hylidae	*Litoria rubella*	ruddy treefrog		C		7
animals	amphibians	Hylidae	*Litoria tyleri*	southern laughing treefrog		C		1
animals	amphibians	Limnodynastidae	*Limnodynastes tasmaniensis*	spotted grassfrog		C		4
animals	amphibians	Limnodynastidae	*Limnodynastes terraereginae*	scarlet sided pobblebonk		C		5
animals	amphibians	Limnodynastidae	*Platyplectrum ornatum*	ornate burrowing frog		C		1
animals	birds	Acanthizidae	*Acanthiza chrysorrhoa*	yellow-rumped thornbill		C		1
animals	birds	Acanthizidae	*Acanthiza reguloides*	buff-rumped thornbill		C		1
animals	birds	Acanthizidae	*Gerygone olivacea*	white-throated gerygone		C		3
animals	birds	Acanthizidae	*Pyrrholaemus sagittatus*	speckled warbler		C		2
animals	birds	Acanthizidae	*Smicrornis brevirostris*	weebill		C		4
animals	birds	Accipitridae	*Haliastur sphenurus*	whistling kite		C		1
animals	birds	Alcedinidae	*Dacelo novaeguineae*	laughing kookaburra		C		4
animals	birds	Anatidae	*Chenonetta jubata*	Australian wood duck		C		1
animals	birds	Artamidae	*Cracticus nigrogularis*	pied butcherbird		C		5
animals	birds	Artamidae	*Cracticus torquatus*	grey butcherbird		C		1
animals	birds	Artamidae	*Gymnorhina tibicen*	Australian magpie		C		10
animals	birds	Artamidae	*Strepera graculina*	pied currawong		C		4
animals	birds	Cacatuidae	*Cacatua sanguinea*	little corella		C		1
animals	birds	Cacatuidae	*Eolophus roseicapilla*	galah		C		5
animals	birds	Campephagidae	*Coracina novaehollandiae*	black-faced cuckoo-shrike		C		2
animals	birds	Charadriidae	*Vanellus miles*	masked lapwing		C		1
animals	birds	Charadriidae	*Vanellus miles novaehollandiae*	masked lapwing (southern subspecies)		C		1
animals	birds	Cisticolidae	*Cisticola exilis*	golden-headed cisticola		C		1
animals	birds	Climacteridae	*Cormobates leucophaea metastasis*	white-throated treecreeper (southern)		C		1
animals	birds	Columbidae	*Geopelia placida*	peaceful dove		C		2
animals	birds	Columbidae	*Ocyphaps lophotes*	crested pigeon		C		3
animals	birds	Columbidae	*Phaps chalcoptera*	common bronzewing		C		1
animals	birds	Coraciidae	*Eurystomus orientalis*	dollarbird		C		2
animals	birds	Corcoracidae	*Struthidea cinerea*	apostlebird		C		2
animals	birds	Corvidae	*Corvus orru*	Torresian crow		C		8
animals	birds	Corvidae	*Corvus sp.*			C		1
animals	birds	Dicaeidae	*Dicaeum hirundinaceum*	mistletoebird		C		1
animals	birds	Estrildidae	*Taeniopygia bichenovii*	double-barred finch		C		1
animals	birds	Estrildidae	*Taeniopygia guttata*	zebra finch		C		1
animals	birds	Hirundinidae	*Hirundo neoxena*	welcome swallow		C		1
animals	birds	Maluridae	*Malurus cyaneus*	superb fairy-wren		C		3
animals	birds	Maluridae	*Malurus lamberti*	variegated fairy-wren		C		1
animals	birds	Meliphagidae	*Caligavis chrysops*	yellow-faced honeyeater		C		3
animals	birds	Meliphagidae	*Entomyzon cyanotis*	blue-faced honeyeater		C		5
animals	birds	Meliphagidae	*Lichmera indistincta*	brown honeyeater		C		3

Kingdom	Class	Family	Scientific Name	Common Name	I	Q	A	Records
animals	birds	Meliphagidae	*Manorina melanocephala*	noisy miner		C		8
animals	birds	Meliphagidae	*Melithreptus albogularis*	white-throated honeyeater		C		3
animals	birds	Meliphagidae	*Melithreptus brevirostris*	brown-headed honeyeater		C		1
animals	birds	Meliphagidae	*Myzomela sanguinolenta*	scarlet honeyeater		C		1
animals	birds	Meliphagidae	*Philemon citreogularis*	little friarbird		C		2
animals	birds	Meliphagidae	*Philemon corniculatus*	noisy friarbird		C		3
animals	birds	Meropidae	*Merops ornatus*	rainbow bee-eater		C		1
animals	birds	Monarchidae	*Grallina cyanoleuca*	magpie-lark		C		7
animals	birds	Oriolidae	*Oriolus sagittatus*	olive-backed oriole		C		2
animals	birds	Pachycephalidae	*Pachycephala pectoralis*	golden whistler		C		1
animals	birds	Pachycephalidae	*Pachycephala rufiventris*	rufous whistler		C		3
animals	birds	Pardalotidae	*Pardalotus punctatus*	spotted pardalote		C		2
animals	birds	Pardalotidae	*Pardalotus striatus*	striated pardalote		C		7
animals	birds	Passeridae	*Passer domesticus*	house sparrow	Y			1
animals	birds	Petroicidae	*Microeca fascinans*	jacky winter		C		1
animals	birds	Petroicidae	*Petroica rosea*	rose robin		C		1
animals	birds	Pomatostomidae	*Pomatostomus temporalis*	grey-crowned babbler		C		1
animals	birds	Psittaculidae	*Alisterus scapularis*	Australian king-parrot		C		3
animals	birds	Psittaculidae	*Aprosmictus erythropterus*	red-winged parrot		C		1
animals	birds	Psittaculidae	*Platycercus adscitus*	pale-headed rosella		C		3
animals	birds	Psittaculidae	*Trichoglossus chlorolepidotus*	scaly-breasted lorikeet		C		6
animals	birds	Psittaculidae	*Trichoglossus moluccanus*	rainbow lorikeet		C		10
animals	birds	Ptilonorhynchidae	*Sericulus chrysocephalus*	regent bowerbird		C		1/1
animals	birds	Rhipiduridae	*Rhipidura albiscapa*	grey fantail		C		1
animals	birds	Rhipiduridae	*Rhipidura leucophrys*	willie wagtail		C		6
animals	mammals	Pseudocheiridae	*Petauroides volans volans*	southern greater glider		E	E	1
animals	reptiles	Elapidae	*Cryptophis nigrescens*	eastern small-eyed snake		C		1
animals	reptiles	Elapidae	*Furina diadema*	red-naped snake		C		1/1
animals	reptiles	Elapidae	*Hoplocephalus bitorquatus*	pale-headed snake		C		1
animals	reptiles	Scincidae	*Morethia boulengeri*	south-eastern morethia skink		C		1/1
fungi	lecanoromycetes	Cladoniaceae	*Cladia muelleri*			C		1/1
plants	land plants	Agavaceae	*Agave*		Y			1
plants	land plants	Apiaceae	*Centella asiatica*			C		1/1
plants	land plants	Aponogetonaceae	*Aponogeton elongatus subsp. elongatus*			NT		1/1
plants	land plants	Asteraceae	*Calotis dentex*	white burr daisy		C		1/1
plants	land plants	Asteraceae	*Cassinia laevis subsp. rosmarinifolia*			C		1/1
plants	land plants	Asteraceae	*Chrysocephalum apiculatum*	yellow buttons		C		1/1
plants	land plants	Asteraceae	*Peripleura hispidula var. setosa*			C		1/1
plants	land plants	Bryaceae	*Bryum*					1/1
plants	land plants	Casuarinaceae	*Allocasuarina littoralis*			C		1/1
plants	land plants	Casuarinaceae	*Allocasuarina torulosa*			C		1
plants	land plants	Celastraceae	*Siphonodon australis*	ivorywood		C		1/1
plants	land plants	Cucurbitaceae	*Cucumis dipsaceus*		Y			1/1
plants	land plants	Goodeniaceae	*Goodenia delicata*			C		1/1
plants	land plants	Goodeniaceae	*Goodenia rotundifolia*			C		1/1
plants	land plants	Hemerocallidaceae	*Dianella revoluta var. minor*			C		2/2

Kingdom	Class	Family	Scientific Name	Common Name	I	Q	A	Records
plants	land plants	Laxmanniaceae	*Laxmannia gracilis*	slender wire lily		C		1/1
plants	land plants	Leguminosae	*Acacia amblygona*	fan-leaf wattle		C		1/1
plants	land plants	Leguminosae	*Acacia bancroftiorum*			C		2/2
plants	land plants	Leguminosae	*Acacia conferta*			C		1/1
plants	land plants	Leguminosae	*Acacia crassa subsp. crassa*			C		1/1
plants	land plants	Leguminosae	*Acacia falcata*	sickle wattle		C		1/1
plants	land plants	Leguminosae	*Acacia fimbriata*	Brisbane golden wattle		C		1/1
plants	land plants	Leguminosae	*Acacia glaucocarpa*	hickory wattle		C		2/2
plants	land plants	Leguminosae	*Acacia ixiophylla*			C		1/1
plants	land plants	Leguminosae	*Acacia penninervis var. penninervis*			C		1/1
plants	land plants	Leguminosae	*Daviesia ulicifolia subsp. stenophylla*			C		1/1
plants	land plants	Leguminosae	*Hardenbergia violacea*			C		1/1
plants	land plants	Leguminosae	*Indigofera linifolia*			C		1/1
plants	land plants	Leguminosae	*Pultenaea microphylla*			C		1/1
plants	land plants	Loranthaceae	*Amyema quandang var. bancroftii*	broad-leaved grey mistletoe		C		1/1
plants	land plants	Myrtaceae	*Angophora leiocarpa*	rusty gum		C		1
plants	land plants	Myrtaceae	*Blakella tessellaris*			C		1
plants	land plants	Myrtaceae	*Corymbia citriodora subsp. variegata*			C		1
plants	land plants	Myrtaceae	*Corymbia intermedia*	pink bloodwood		C		1
plants	land plants	Myrtaceae	*Eucalyptus biturbinata*			C		1
plants	land plants	Myrtaceae	*Eucalyptus crebra*	narrow-leaved red ironbark		C		1
plants	land plants	Myrtaceae	*Eucalyptus longirostrata*			C		1/1
plants	land plants	Myrtaceae	*Eucalyptus propinqua*	small-fruited grey gum		C		1
plants	land plants	Myrtaceae	*Eucalyptus tereticornis*			C		1
plants	land plants	Plantaginaceae	*Mecardonia procumbens*		Y			1/1
plants	land plants	Poaceae	*Cymbopogon refractus*	barbed-wire grass		C		2/2
plants	land plants	Poaceae	*Digitaria ramularis*			C		1/1
plants	land plants	Poaceae	*Entolasia stricta*	wiry panic		C		1/1
plants	land plants	Poaceae	*Eragrostis leptostachya*			C		1/1
plants	land plants	Poaceae	*Panicum decompositum var. decompositum*			C		1/1
plants	land plants	Poaceae	*Panicum effusum*			C		2/2
plants	land plants	Poaceae	*Sorghum x almum*		Y			1/1
plants	land plants	Poaceae	*Tragus australianus*	small burr grass		C		1/1
plants	land plants	Proteaceae	*Grevillea floribunda subsp. floribunda*			C		1/1
plants	land plants	Rubiaceae	*Gynochthodes canthoides*			C		1/1
plants	land plants	Rubiaceae	*Opercularia diphylla*			C		1/1
plants	land plants	Santalaceae	*Choretrum candollei*	white sour bush		C		1/1
plants	land plants	Sapindaceae	*Dodonaea peduncularis*			C		1/1
plants	land plants	Solanaceae	*Solanum nemophilum*			C		3/3
plants	land plants	Sterculiaceae	*Brachychiton populneus subsp. populneus*			SL		1
plants	land plants	Tamaricaceae	*Tamarix indica*		Y			1/1
plants	land plants	Verbenaceae	*Lantana camara*	lantana	Y			1

CODES

I - Y indicates that the taxon is introduced to Queensland and has naturalised.

Q - Indicates the Queensland conservation status of each taxon under the *Nature Conservation Act 1992.*
The codes are Extinct (EX), Extinct in the Wild (PE), Critically Endangered (CR), Endangered (E), Vulnerable (V), Near Threatened (NT), Special Least Concern (SL) and Least Concern (C).

A - Indicates the Australian conservation status of each taxon under the *Environment Protection and Biodiversity Conservation Act 1999.*
The values of EPBC are Extinct (EX), Extinct in the Wild (XW), Critically Endangered (CE), Endangered (E), Vulnerable (V) and Conservation Dependent (CD).

Records - The first number indicates the total number of records of the taxon (wildlife records and species listings for selected areas).
This number is output as 99999 if it equals or exceeds this value. A second number located after a / indicates the number of specimen records for the taxon.
This number is output as 999 if it equals or exceeds this value.

Site Topography

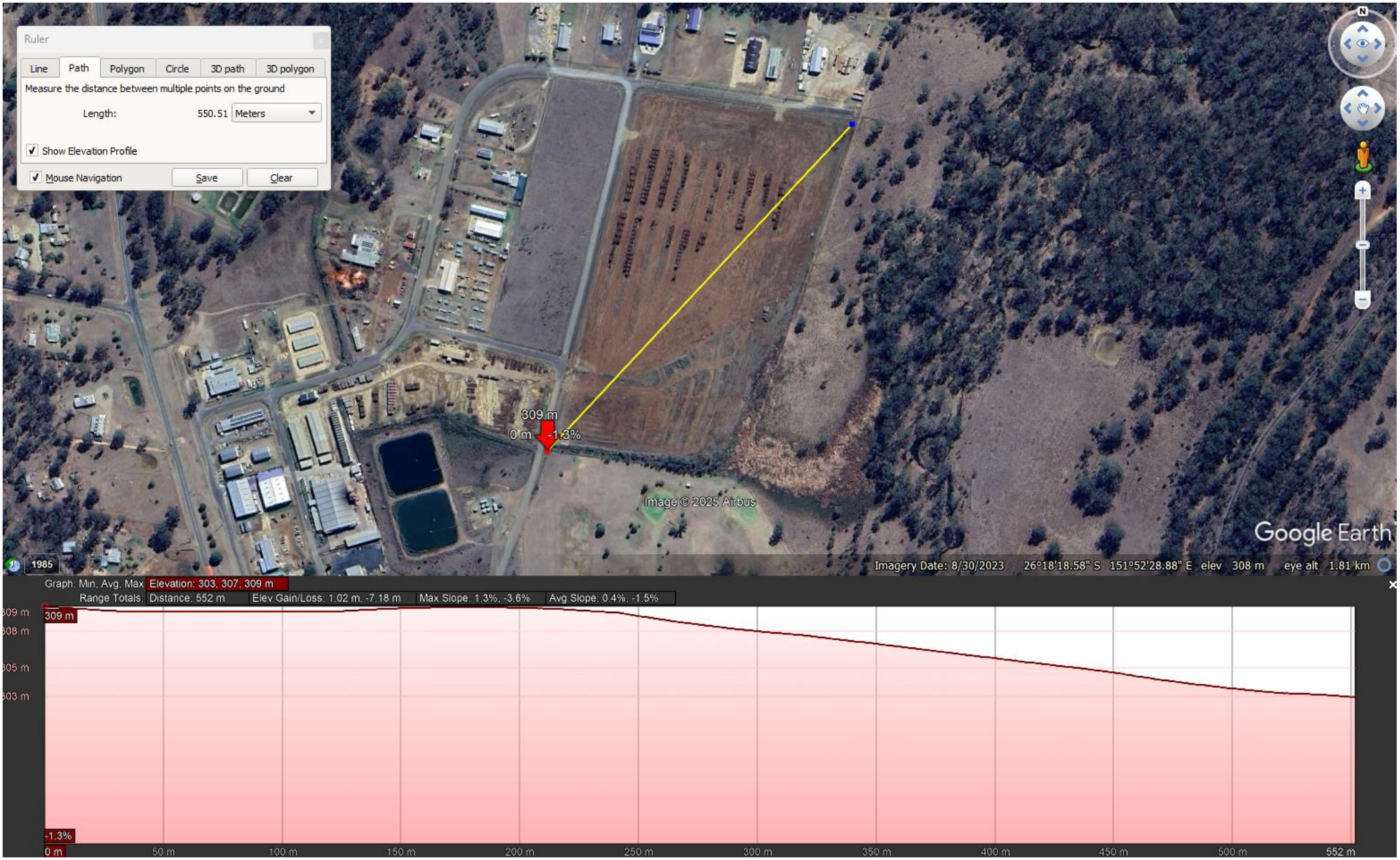

Bore Report

From Year:

Registered Number	Facility Type	Facility Status	Drilled Date	Office	Shire
121883	Sub-Artesian Facility	Existing	21/07/2004	Bundaberg	6630 - SOUTH BURNETT REGIONAL

Details

Description	46 RYANS ROAD		
Parish	2961 - MC EUEN		
Original Name			
Driller Name	R.JACKMAN		
Drill Company	R.JACKMAN		
Const Method	ROTARY		
Bore Line			
D/O File No		**Polygon**	
R/O File No		**Equipment**	
H/O File No		**RN of Bore Replaced**	
Log Received Date		**Data Owner**	
Roles	Water Supply		

Location

Latitude	26-18-30	**Basin**	1362
Longitude	151-53-06	**Sub-area**	
GIS Latitude	-26.30834404	**Lot**	212
GIS Longitude	151.8850629	**Plan**	FY1126
Easting	388702		
Northing	7089689	**Map Scale**	
Zone	56	**Map Series**	
Accuracy	UNKN	**Map No**	
GPS Accuracy		**Map Name**	
Checked	Yes	**Prog Section**	

Casing

4 ***records for RN*** **121883**

Pipe	Date	Rec	Top (m)	Bottom (m)	Material Description	Mat Size (mm)	Size Desc	Outside Diameter (mm)
A	21/07/2004	1	0.00	50.60	Polyvinyl Chloride	9.000	WT - Wall Thickness	125
A	21/07/2004	2	0.00	0.91	Grout			
A	21/07/2004	3	36.58	50.60	Perforated or Slotted Casing			150
A	21/07/2004	4	27.43	50.60	Gravel Pack	5.000	GR - Gravel Size	

Strata Logs

5 ***records for RN*** **121883**

Bore Report

From Year:

Rec	Top (m)	Bottom (m)	Strata Description
1	0.00	3.05	TAN CLAY
2	3.05	10.97	SANDY CLAY
3	10.97	27.43	GREY GRAVELY CLAY
4	27.43	36.58	MOIST GRAVELY CLAY
5	36.58	50.60	LIGHT GREY SANDSTONE LAYERS QUARTZ

Stratigraphies

0 *records for RN* **121883**

Aquifers

1 *records for RN* **121883**

Rec	Top (m)	Bottom (m)	Lithology	Date	SWL (m)	Flow	Quality	Yield (L/s)	Contr	Cond	Formation Name
1	36.58		SDST - Sandstone	21/07/2004	-26.52	N		0.19	Y	UC	

Pump Tests Part 1

1 *records for RN* **121883**

Pipe	Date	Rec	RN of Pumped Bore	Top (m)	Bottom (m)	Dist (m)	Meth	Test Types	Pump Type	Suction Set (m)	Q Prior to Test (l/s)	Dur of Q PR (mins)	Pres on Arriv (m)	Q on Arriv (l/s/)
A	21/07/2004	1	121883				PUM		BLOW TESTED	49.99				

Pump Tests Part 2

1 *records for RN* **121883**

Pipe	Date	Rec	Test Dur (mins)	SWL(m)	Recov Time (mins)	Resid DD (m)	Max DD or P RED (m)	Q at Max DD (l/s)	Time to Max DD (mins)	Max Q (l/s)	Calc Stat HD (m)	Design Yield (l/s)	Design BP (m)	Suct. Set (m)	Tmsy (m2/Day)	Stor
A	21/07/2004	1	60											49.99		

Bore Conditions

0 *records for RN* **121883**

Bore Report

From Year:

Elevations

0 *records for RN* **121883**

Water Analysis Part 1

0 *records for RN* **121883**

Water Analysis Part 2

0 *records for RN* **121883**

Water Levels

0 *records for RN* **121883**

Wire Line Logs

0 *records for RN* **121883**

Field Measurements

1 *records for RN* **121883**

Pipe	Date	Depth (m)	Conduct (uS/cm)	pH	Temp (C)	NO3 (mg/L)	DO2 (mg/L)	Eh (mV)	Alkalinity (mV)	Samp	Method	Samp	Source
A	21/07/2004		2500							PU	Pump - Other or Flowing Bore	GB	Groundwater - from Bore

Special Water Analysis

0 *records for RN* **121883**

Bore Report

From Year:

User Licence and Conditions

Disclaimer

Open Licence (Single Supply)

Permitted use:
- You may use the supplied data for your own purposes (including supply to consultants for a specific consultancy project for you but the consultants must return or destroy the supplied data when the project is finished). You must not sell or distribute the supplied data.
- You must display this copyright notice on any copies of the supplied data however altered, reformatted or redisplayed if you supply to a consultant or copy for back up purposes: "© State of Queensland 2023".
- You may create and distribute hardcopy and digital products based on or containing the supplied data, provided all the following conditions are met:
- You must display this acknowledgment on the product(s): "Based on or contains data provided by the State of Queensland 2023. In consideration of the State permitting use of this data you acknowledge and agree that the State gives no warranty in relation to the data (including accuracy, reliability, completeness, currency or suitability) and accepts no liability (including without limitation, liability in negligence) for any loss, damage or costs (including consequential damage) relating to any use of the data. Data must not be used for direct marketing or be used in breach of the privacy laws."
- You must include metadata with the product(s) you create that use or incorporate the supplied data and the metadata must incorporate as a minimum the metadata provided with this supplied data.

Obligations:

- You must not use the data for direct marketing or in breach of the privacy laws.

Ownership:

The State of Queensland is the owner of the intellectual property rights in and to the supplied data or has the right to make this supplied data available.

Disclaimer and indemnity:
You agree to accept all responsibility and risks associated with the use of the supplied data. The State makes no representations or warranties in relation to the supplied data, and, you agree that, to the extent permitted by law, all warranties relating to accuracy, reliability, completeness, currency or suitability for any particular purpose and all liability for any loss, damage or costs (including consequential damage) incurred in any way (including but not limited to that arising from negligence) in connection with any use of or reliance on the supplied data are excluded or limited. You agree to continually indemnify the State of Queensland (and its officers and employees) against any loss, cost, expense, damage and liability of any kind (including consequential damage and liability in negligence) arising directly or indirectly from or related to any claim relating to your use of the supplied data or any product made from the data.

Bore Report

From Year:

Registered Number	Facility Type	Facility Status	Drilled Date	Office	Shire
174451	Sub-Artesian Facility	Existing	05/05/2017	Bundaberg	6630 - SOUTH BURNETT REGIONAL

Details

Description	LOG #2007693		
Parish	6000 - NO LONGER USED		
Original Name			
Driller Name	STOLZENBERG, KEVIN DUDLEY		
Drill Company	STOLZENBERG DRILLING		
Const Method	ROTARY AIR		
Bore Line			
D/O File No		**Polygon**	
R/O File No		**Equipment**	
H/O File No		**RN of Bore Replaced**	
Log Received Date	26/05/2017	**Data Owner**	
Roles	Sub-Artesian Monitoring		

Location

Latitude	26-18-17	**Basin**	1362
Longitude	151-53-01	**Sub-area**	
GIS Latitude	-26.30471561	**Lot**	221
GIS Longitude	151.88365214	**Plan**	SP116346
Easting	388564		
Northing	7090089	**Map Scale**	
Zone	56	**Map Series**	
Accuracy	GPS	**Map No**	9245-21433
GPS Accuracy	10	**Map Name**	
Checked	Yes	**Prog Section**	

Casing

5 ***records for RN*** **174451**

Pipe	Date	Rec	Top (m)	Bottom (m)	Material Description	Mat Size (mm)	Size Desc	Outside Diameter (mm)
A	05/05/2017	1	0.00	37.50	Polyvinyl Chloride	2.600	WT - Wall Thickness	60
A	05/05/2017	2	31.40	37.50	Perforated or Slotted Casing	1.000	AP - Aperture Size	50
X	05/05/2017	3	0.00	5.20	Grout			150
X	05/05/2017	4	5.20	5.50	Bentonite Seal			150
X	05/05/2017	5	5.50	37.50	Gravel Pack			150

Bore Report

From Year:

Strata Logs

9 *records for RN* **174451**

Rec	Top (m)	Bottom (m)	Strata Description
1	0.00	0.90	CLAY AND ROCKS (FILL)
2	0.90	3.00	WHITE AND BROWN CLAY
3	3.00	6.10	WHITE SANDY CLAY
4	6.10	9.10	PINK TO BROWN CLAY
5	9.10	13.70	BROWN SANDY CLAY
6	13.70	21.30	YELLOW TO BROWN SANDY CLAY
7	21.30	29.00	BROWN TO PINK SANDY CLAY
8	29.00	32.00	WHITE SANDY CLAY
9	32.00	37.50	BROWN SANDY CLAY

Stratigraphies

0 *records for RN* **174451**

Aquifers

0 *records for RN* **174451**

Pump Tests Part 1

0 *records for RN* **174451**

Pump Tests Part 2

0 *records for RN* **174451**

Bore Conditions

0 *records for RN* **174451**

Elevations

0 *records for RN* **174451**

Water Analysis Part 1

0 *records for RN* **174451**

Water Analysis Part 2

0 *records for RN* **174451**

Water Levels

0 *records for RN* **174451**

Bore Report

From Year:

Wire Line Logs

0 *records for RN* **174451**

Field Measurements

0 *records for RN* **174451**

Special Water Analysis

0 *records for RN* **174451**

Bore Report

From Year:

User Licence and Conditions

Disclaimer

Open Licence (Single Supply)

Permitted use:
- You may use the supplied data for your own purposes (including supply to consultants for a specific consultancy project for you but the consultants must return or destroy the supplied data when the project is finished). You must not sell or distribute the supplied data.
- You must display this copyright notice on any copies of the supplied data however altered, reformatted or redisplayed if you supply to a consultant or copy for back up purposes: "© State of Queensland 2023".
- You may create and distribute hardcopy and digital products based on or containing the supplied data, provided all the following conditions are met:
- You must display this acknowledgment on the product(s): "Based on or contains data provided by the State of Queensland 2023. In consideration of the State permitting use of this data you acknowledge and agree that the State gives no warranty in relation to the data (including accuracy, reliability, completeness, currency or suitability) and accepts no liability (including without limitation, liability in negligence) for any loss, damage or costs (including consequential damage) relating to any use of the data. Data must not be used for direct marketing or be used in breach of the privacy laws."
- You must include metadata with the product(s) you create that use or incorporate the supplied data and the metadata must incorporate as a minimum the metadata provided with this supplied data.

Obligations:

- You must not use the data for direct marketing or in breach of the privacy laws.

Ownership:

The State of Queensland is the owner of the intellectual property rights in and to the supplied data or has the right to make this supplied data available.

Disclaimer and indemnity:
You agree to accept all responsibility and risks associated with the use of the supplied data. The State makes no representations or warranties in relation to the supplied data, and, you agree that, to the extent permitted by law, all warranties relating to accuracy, reliability, completeness, currency or suitability for any particular purpose and all liability for any loss, damage or costs (including consequential damage) incurred in any way (including but not limited to that arising from negligence) in connection with any use of or reliance on the supplied data are excluded or limited. You agree to continually indemnify the State of Queensland (and its officers and employees) against any loss, cost, expense, damage and liability of any kind (including consequential damage and liability in negligence) arising directly or indirectly from or related to any claim relating to your use of the supplied data or any product made from the data.

Bore Report

From Year:

Registered Number	Facility Type	Facility Status	Drilled Date	Office	Shire
174552	Sub-Artesian Facility	Existing	05/05/2017	Bundaberg	6630 - SOUTH BURNETT REGIONAL

Details

Description	LOG #2007694		
Parish	6000 - NO LONGER USED		
Original Name			
Driller Name	STOLZENBERG, KEVIN DUDLEY		
Drill Company	STOLZENBERG DRILLING		
Const Method	ROTARY AIR		
Bore Line			
D/O File No		**Polygon**	
R/O File No		**Equipment**	
H/O File No		**RN of Bore Replaced**	
Log Received Date	26/05/2017	**Data Owner**	
Roles	Sub-Artesian Monitoring		

Location

Latitude	26-18-10	**Basin**	1362
Longitude	151-53-01	**Sub-area**	
GIS Latitude	-26.30277417	**Lot**	151
GIS Longitude	151.88361064	**Plan**	FY613
Easting	388558		
Northing	7090304	**Map Scale**	
Zone	56	**Map Series**	
Accuracy	GPS	**Map No**	9245-21433
GPS Accuracy	10	**Map Name**	
Checked	Yes	**Prog Section**	

Casing

5 ***records for RN*** **174552**

Pipe	Date	Rec	Top (m)	Bottom (m)	Material Description	Mat Size (mm)	Size Desc	Outside Diameter (mm)
A	05/05/2017	1	0.00	37.65	Polyvinyl Chloride	2.600	WT - Wall Thickness	60
A	05/05/2017	2	31.55	37.65	Perforated or Slotted Casing	1.000	AP - Aperture Size	50
X	05/05/2017	3	0.00	5.50	Grout			150
X	05/05/2017	4	5.50	5.80	Bentonite Seal			150
X	05/05/2017	5	5.80	37.65	Gravel Pack			150

Bore Report

From Year:

Strata Logs

12 ***records for RN*** **174552**

Rec	Top (m)	Bottom (m)	Strata Description
1	0.00	0.60	SOIL
2	0.60	1.50	PINK CLAY
3	1.50	7.60	BROWN TO WHITE SANDY CLAY
4	7.60	9.10	WHITE SANDY CLAY
5	9.10	10.70	BROWN SANDY CLAY
6	10.70	13.70	PINK SANDY CLAY
7	13.70	22.90	CREAM SANDY CLAY
8	22.90	25.90	DARK BROWN SANDY CLAY
9	25.90	27.40	CREAM SANDY CLAY
10	27.40	30.50	WHITE SANDY CLAY
11	30.50	33.50	PINK SANDY CLAY
12	33.50	37.65	BROWN SANDY CLAY *

Stratigraphies

0 ***records for RN*** **174552**

Aquifers

1 ***records for RN*** **174552**

Rec	Top (m)	Bottom (m)	Lithology	Date	SWL (m)	Flow	Quality	Yield (L/s)	Contr	Cond	Formation Name
1	33.50	37.65	CLAY - Clay	05/05/2017	-34.70	N			Y	UC	MARONGHI CREEK BEDS

Pump Tests Part 1

1 ***records for RN*** **174552**

Pipe	Date	Rec	RN of Pumped Bore	Top (m)	Bottom (m)	Dist (m)	Meth	Test Types	Pump Type	Suction Set (m)	Q Prior to Test (l/s)	Dur of Q PR (mins)	Pres on Arriv (m)	Q on Arriv (l/s/)
A	05/05/2017	1	174552	33.50	37.65					37.65				

Bore Report

From Year:

Pump Tests Part 2

1 *records for RN* 174552

Pipe	Date	Rec	Test Dur (mins)	SWL(m)	Recov Time (mins)	Resid DD (m)	Max DD or P RED (m)	Q at Max DD (l/s)	Time to Max DD (mins)	Max Q (l/s)	Calc Stat HD (m)	Design Yield (l/s)	Design BP (m)	Suct. Set (m)	Tmsy (m2/Day)	Stor
A	05/05/2017	1	120	-34.70										37.65		

Bore Conditions

0 *records for RN* 174552

Elevations

0 *records for RN* 174552

Water Analysis Part 1

0 *records for RN* 174552

Water Analysis Part 2

0 *records for RN* 174552

Water Levels

0 *records for RN* 174552

Wire Line Logs

0 *records for RN* 174552

Field Measurements

1 *records for RN* 174552

Pipe	Date	Depth (m)	Conduct (uS/cm)	pH	Temp (C)	NO3 (mg/L)	DO2 (mg/L)	Eh (mV)	Alkalinity (mV)	Samp	Method	Samp	Source
A	05/05/2017	36.00	7120							PU	Pump - Other or Flowing Bore	GB	Groundwater - from Bore

Special Water Analysis

0 *records for RN* 174552

Bore Report

From Year:

User Licence and Conditions

Disclaimer

Open Licence (Single Supply)

Permitted use:
- You may use the supplied data for your own purposes (including supply to consultants for a specific consultancy project for you but the consultants must return or destroy the supplied data when the project is finished). You must not sell or distribute the supplied data.
- You must display this copyright notice on any copies of the supplied data however altered, reformatted or redisplayed if you supply to a consultant or copy for back up purposes: "© State of Queensland 2023".
- You may create and distribute hardcopy and digital products based on or containing the supplied data, provided all the following conditions are met:
- You must display this acknowledgment on the product(s): "Based on or contains data provided by the State of Queensland 2023. In consideration of the State permitting use of this data you acknowledge and agree that the State gives no warranty in relation to the data (including accuracy, reliability, completeness, currency or suitability) and accepts no liability (including without limitation, liability in negligence) for any loss, damage or costs (including consequential damage) relating to any use of the data. Data must not be used for direct marketing or be used in breach of the privacy laws."
- You must include metadata with the product(s) you create that use or incorporate the supplied data and the metadata must incorporate as a minimum the metadata provided with this supplied data.

Obligations:

- You must not use the data for direct marketing or in breach of the privacy laws.

Ownership:

The State of Queensland is the owner of the intellectual property rights in and to the supplied data or has the right to make this supplied data available.

Disclaimer and indemnity:
You agree to accept all responsibility and risks associated with the use of the supplied data. The State makes no representations or warranties in relation to the supplied data, and, you agree that, to the extent permitted by law, all warranties relating to accuracy, reliability, completeness, currency or suitability for any particular purpose and all liability for any loss, damage or costs (including consequential damage) incurred in any way (including but not limited to that arising from negligence) in connection with any use of or reliance on the supplied data are excluded or limited. You agree to continually indemnify the State of Queensland (and its officers and employees) against any loss, cost, expense, damage and liability of any kind (including consequential damage and liability in negligence) arising directly or indirectly from or related to any claim relating to your use of the supplied data or any product made from the data.

Bore Report

From Year:

Registered Number	Facility Type	Facility Status	Drilled Date	Office	Shire
191525	Sub-Artesian Facility	Abandoned and Destroyed	14/01/2020	Bundaberg	6630 - SOUTH BURNETT REGIONAL

Details

Description	LOG #2045853		
Parish	6000 - NO LONGER USED		
Original Name			
Driller Name	GREGORY, PAUL		
Drill Company	GEODRILL AUSTRALIA		
Const Method	ROTARY AIR		
Bore Line			
D/O File No		**Polygon**	
R/O File No		**Equipment**	
H/O File No		**RN of Bore Replaced**	
Log Received Date	26/08/2020	**Data Owner**	
Roles	Water Supply		

Location

Latitude	26-18-33	**Basin**	1362
Longitude	151-51-53	**Sub-area**	
GIS Latitude	-26.30907287	**Lot**	17
GIS Longitude	151.8648077	**Plan**	RP190917
Easting	386687		
Northing	7089590	**Map Scale**	
Zone	56	**Map Series**	
Accuracy	GPS	**Map No**	9245-24122
GPS Accuracy	10	**Map Name**	
Checked	Yes	**Prog Section**	

Casing

2 *records for RN* **191525**

Pipe	Date	Rec	Top (m)	Bottom (m)	Material Description	Mat Size (mm)	Size Desc	Outside Diameter (mm)
X	14/07/2020	1	0.00	5.00	Grout			187
X	14/07/2020	2	5.00	81.00	Cuttings or other fill between casing and hole wall			187

Strata Logs

4 *records for RN* **191525**

Rec	Top (m)	Bottom (m)	Strata Description

Bore Report

From Year:

Rec	Top (m)	Bottom (m)	Strata Description
1	0.00	1.00	ROCKY TOPSOIL
2	1.00	63.00	WEATHERED SHALE YELLOW
3	63.00	81.00	GREEN SHALE
4	81.00	78.00	SMALL FRACTURE

Stratigraphies

0 *records for RN* **191525**

Aquifers

1 *records for RN* **191525**

Rec	Top (m)	Bottom (m)	Lithology	Date	SWL (m)	Flow	Quality	Yield (L/s)	Contr	Cond	Formation Name
1	77.00	78.00	SHLE - Shale	14/07/2020	-68.00	N	SALT	0.06	N	FR	

Pump Tests Part 1

0 *records for RN* **191525**

Pump Tests Part 2

0 *records for RN* **191525**

Bore Conditions

0 *records for RN* **191525**

Elevations

0 *records for RN* **191525**

Water Analysis Part 1

0 *records for RN* **191525**

Water Analysis Part 2

0 *records for RN* **191525**

Water Levels

0 *records for RN* **191525**

Wire Line Logs

0 *records for RN* **191525**

Field Measurements

0 *records for RN* **191525**

Special Water Analysis

0 *records for RN* **191525**

Bore Report

From Year:

User Licence and Conditions

Disclaimer

Open Licence (Single Supply)

Permitted use:
- You may use the supplied data for your own purposes (including supply to consultants for a specific consultancy project for you but the consultants must return or destroy the supplied data when the project is finished). You must not sell or distribute the supplied data.
- You must display this copyright notice on any copies of the supplied data however altered, reformatted or redisplayed if you supply to a consultant or copy for back up purposes: "© State of Queensland 2023".
- You may create and distribute hardcopy and digital products based on or containing the supplied data, provided all the following conditions are met:
- You must display this acknowledgment on the product(s): "Based on or contains data provided by the State of Queensland 2023. In consideration of the State permitting use of this data you acknowledge and agree that the State gives no warranty in relation to the data (including accuracy, reliability, completeness, currency or suitability) and accepts no liability (including without limitation, liability in negligence) for any loss, damage or costs (including consequential damage) relating to any use of the data. Data must not be used for direct marketing or be used in breach of the privacy laws."
- You must include metadata with the product(s) you create that use or incorporate the supplied data and the metadata must incorporate as a minimum the metadata provided with this supplied data.

Obligations:

- You must not use the data for direct marketing or in breach of the privacy laws.

Ownership:

The State of Queensland is the owner of the intellectual property rights in and to the supplied data or has the right to make this supplied data available.

Disclaimer and indemnity:
You agree to accept all responsibility and risks associated with the use of the supplied data. The State makes no representations or warranties in relation to the supplied data, and, you agree that, to the extent permitted by law, all warranties relating to accuracy, reliability, completeness, currency or suitability for any particular purpose and all liability for any loss, damage or costs (including consequential damage) incurred in any way (including but not limited to that arising from negligence) in connection with any use of or reliance on the supplied data are excluded or limited. You agree to continually indemnify the State of Queensland (and its officers and employees) against any loss, cost, expense, damage and liability of any kind (including consequential damage and liability in negligence) arising directly or indirectly from or related to any claim relating to your use of the supplied data or any product made from the data.

Bore Report

From Year:

Registered Number	Facility Type	Facility Status	Drilled Date	Office	Shire
200499	Sub-Artesian Facility	Abandoned and Destroyed	23/03/2023	Bundaberg	6630 - SOUTH BURNETT REGIONAL

Details

Description			
Parish	6000 - NO LONGER USED		
Original Name			
Driller Name	FOWLES, KAINE		
Const Method	ROTARY AIR		
Bore Line			
D/O File No		**Polygon**	
R/O File No		**Equipment**	
H/O File No		**RN of Bore Replaced**	
Log Received Date	06/06/2023	**Data Owner**	
Roles	Water Supply		

Location

Datum	GDA94	**Basin**	1362
Latitude	26-18-50	**Sub-area**	
Longitude	151-52-45	**Lot**	220
GIS Latitude	-26.3138273571	**Plan**	W53522
GIS Longitude	151.879287205		
Easting	388137	**Map Scale**	
Northing	7089076	**Map Series**	
Zone	56	**Map No**	9245-21344
Accuracy	GPS	**Map Name**	
GPS Accuracy	10	**Prog Section**	
Checked	Yes		

Casing

2 ***records for RN*** **200499**

Pipe	Date	Rec	Top (m)	Bottom (m)	Material Description	Mat Size (mm)	Size Desc	Outside Diameter (mm)
X	23/03/2023	1	0.00	5.00	Grout			191
X	23/03/2023	2	5.00	66.00	Cuttings or other fill between casing and hole wall			191

Strata Logs

4 ***records for RN*** **200499**

Rec	Top (m)	Bottom (m)	Strata Description

Bore Report

From Year:

Rec	Top (m)	Bottom (m)	Strata Description
1	0.00	1.00	TOPSOIL
2	1.00	8.00	WHITE KOOLIU CLAY
3	8.00	18.00	YELLOW KOOLIU CLAY
4	18.00	66.00	YELLOW ORANGE CLAYSTONE

Stratigraphies
0 *records for RN* **200499**

Aquifers
0 *records for RN* **200499**

Pump Tests Part 1
0 *records for RN* **200499**

Pump Tests Part 2
0 *records for RN* **200499**

Bore Conditions
0 *records for RN* **200499**

Elevations
0 *records for RN* **200499**

Water Analysis Part 1
0 *records for RN* **200499**

Water Analysis Part 2
0 *records for RN* **200499**

Water Levels
0 *records for RN* **200499**

Wire Line Logs
0 *records for RN* **200499**

Field Measurements
0 *records for RN* **200499**

Special Water Analysis
0 *records for RN* **200499**

Bore Report

From Year:

User Licence and Conditions

Disclaimer

Open Licence (Single Supply)

Permitted use:
- You may use the supplied data for your own purposes (including supply to consultants for a specific consultancy project for you but the consultants must return or destroy the supplied data when the project is finished). You must not sell or distribute the supplied data.
- You must display this copyright notice on any copies of the supplied data however altered, reformatted or redisplayed if you supply to a consultant or copy for back up purposes: "© State of Queensland 2025".
- You may create and distribute hardcopy and digital products based on or containing the supplied data, provided all the following conditions are met:
- You must display this acknowledgment on the product(s): "Based on or contains data provided by the State of Queensland 2025. In consideration of the State permitting use of this data you acknowledge and agree that the State gives no warranty in relation to the data (including accuracy, reliability, completeness, currency or suitability) and accepts no liability (including without limitation, liability in negligence) for any loss, damage or costs (including consequential damage) relating to any use of the data. Data must not be used for direct marketing or be used in breach of the privacy laws."
- You must include metadata with the product(s) you create that use or incorporate the supplied data and the metadata must incorporate as a minimum the metadata provided with this supplied data.

Obligations:

- You must not use the data for direct marketing or in breach of the privacy laws.

Ownership:

The State of Queensland is the owner of the intellectual property rights in and to the supplied data or has the right to make this supplied data available.

Disclaimer and indemnity:
You agree to accept all responsibility and risks associated with the use of the supplied data. The State makes no representations or warranties in relation to the supplied data, and, you agree that, to the extent permitted by law, all warranties relating to accuracy, reliability, completeness, currency or suitability for any particular purpose and all liability for any loss, damage or costs (including consequential damage) incurred in any way (including but not limited to that arising from negligence) in connection with any use of or reliance on the supplied data are excluded or limited. You agree to continually indemnify the State of Queensland (and its officers and employees) against any loss, cost, expense, damage and liability of any kind (including consequential damage and liability in negligence) arising directly or indirectly from or related to any claim relating to your use of the supplied data or any product made from the data.

Appendix E EMR/CLR and UXO Searches

Department of Environment and Science (DES)
ABN 46 640 294 485
400 George St Brisbane, Queensland 4000
GPO Box 2454, Brisbane QLD 4001, AUSTRALIA
www.des.qld.gov.au

SEARCH RESPONSE
ENVIRONMENTAL MANAGEMENT REGISTER (EMR)
CONTAMINATED LAND REGISTER (CLR)

Madeline Warnick
Unit 1, 7 Birubi Street
Coorparoo QLD 4151

Transaction ID: 50854320 EMR Site Id: 28 April 2023
Cheque Number:
Client Reference:

This response relates to a search request received for the site:
Lot: 106 Plan: SP331010
2 KEMP ST
WONDAI

EMR RESULT

The above site is NOT included on the Environmental Management Register.

CLR RESULT

The above site is NOT included on the Contaminated Land Register.

ADDITIONAL ADVICE

All search responses include particulars of land listed in the EMR/CLR when the search was generated.
The EMR/CLR does NOT include:-

1. land which is contaminated land (or a complete list of contamination) if DES has not been notified
2. land on which a notifiable activity is being or has been undertaken (or a complete list of activities) if DES has not been notified

If you have any queries in relation to this search please email emr.clr.registry@des.qld.gov.au

Administering Authority

UXO Search

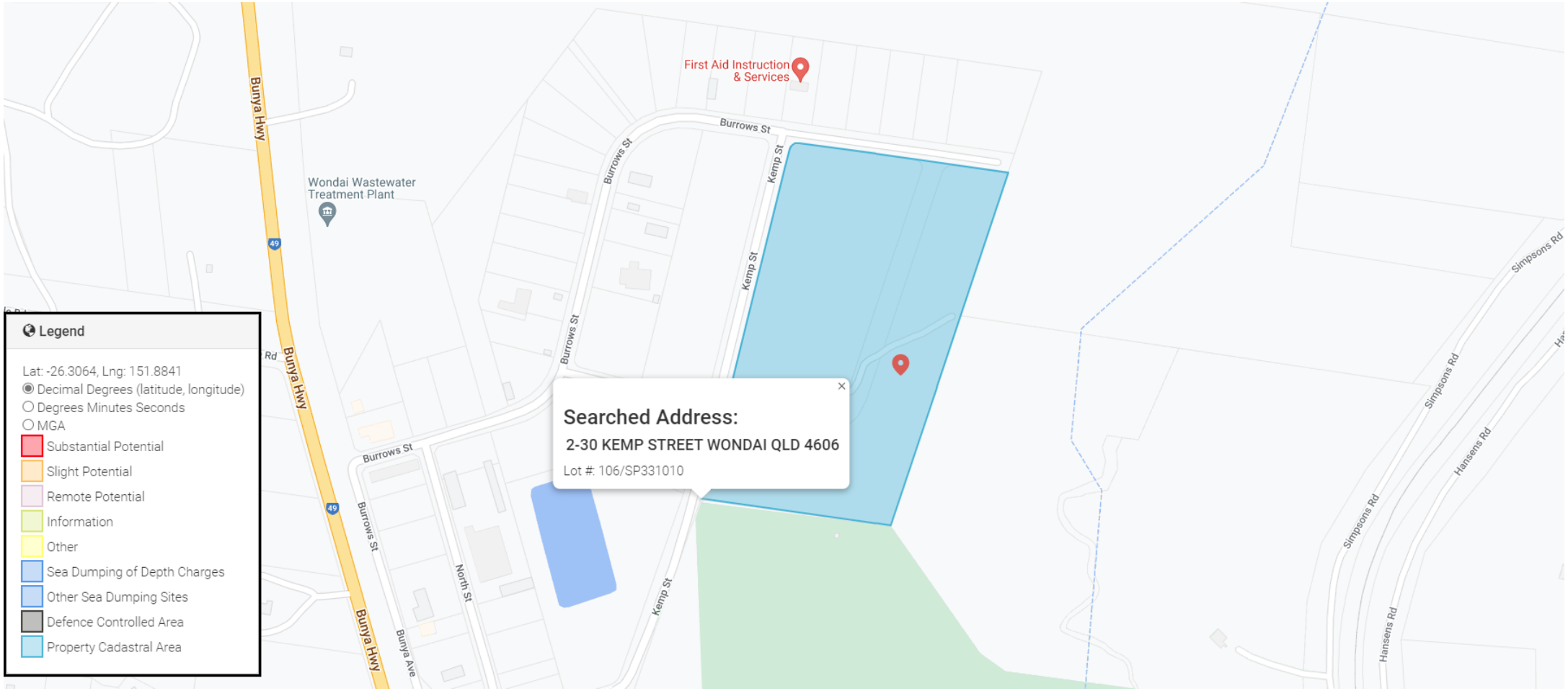
First Aid Instruction & Services
Wondai Wastewater Treatment Plant
Bunya Hwy
Burrows St
Kemp St
North St
Bunya Ave
Simpsons Rd
Hansens Rd
Searched Address:
2-30 KEMP STREET WONDAI QLD 4606
Lot #: 106/SP331010
Legend
Lat: -26.3064, Lng: 151.8841
Decimal Degrees (latitude, longitude)
Degrees Minutes Seconds
MGA
Substantial Potential
Slight Potential
Remote Potential
Information
Other
Sea Dumping of Depth Charges
Other Sea Dumping Sites
Defence Controlled Area
Property Cadastral Area

Appendix F Heritage Database Searches

Cultural Heritage Database and Register Search Report

Search report reference number: 179067

The Aboriginal and Torres Strait Islander Cultural Heritage Database (cultural heritage database) and Aboriginal and Torres Strait Islander Cultural Heritage Register (cultural heritage register) have been searched in accordance with the location description provided, and the results are set out in this report.

The cultural heritage database is intended to be a research and planning tool to help Aboriginal and Torres Strait Islander parties, researchers, and other persons in their consideration of the cultural heritage values of particular areas.

The cultural heritage register is intended to be a depository for information for consideration for land use and land use planning, and a research and planning tool to help people in their consideration of the Aboriginal cultural heritage values of particular objects and areas.

Aboriginal or Torres Strait Islander cultural heritage which may exist within the search area is protected under the *Aboriginal Cultural Heritage Act 2003* and the *Torres Strait Islander Cultural Heritage Act 2003* (the Cultural Heritage Acts), even if the Department of Seniors, Disability Services and Aboriginal and Torres Strait Islander Partnerships (the Department) has no records relating to it.

The placing of information on the database is not intended to be conclusive about whether the information is up-to-date, comprehensive or otherwise accurate.

Under the Cultural Heritage Acts, a person carrying out an activity must take all reasonable and practicable measures to ensure the activity does not harm Aboriginal or Torres Strait Islander cultural heritage. This applies whether or not such places are recorded in an official register and whether or not they are located on private land.

Please refer to the Department website https://www.qld.gov.au/firstnations/environment-land-use-native-title/cultural-heritage/cultural-heritage-duty-of-care to obtain a copy of the gazetted Cultural Heritage Duty of Care Guidelines, which set out reasonable and practicable measure for meeting the cultural heritage duty of care.

In order to meet your duty of care, any land-use activity within the vicinity of recorded cultural heritage should not proceed without the agreement of the Aboriginal or Torres Strait Islander Party for the area, or by developing a Cultural Heritage Management Plan under Part 7 of the Cultural Heritage Acts.

The extent to which the person has complied with Cultural Heritage Duty of Care Guidelines and the extent the person consulted Aboriginal or Torres Strait Islander Parties about carrying out the activity – and the results of the consultation – are factors a court may consider when determining if a land user has complied with the cultural heritage duty of care.

Should you have any further queries, please do not hesitate to contact the department via email: cultural.heritage@dsdsatsip.qld.gov.au or telephone: 1300 378 401.

Cultural Heritage Database and Register Search Report

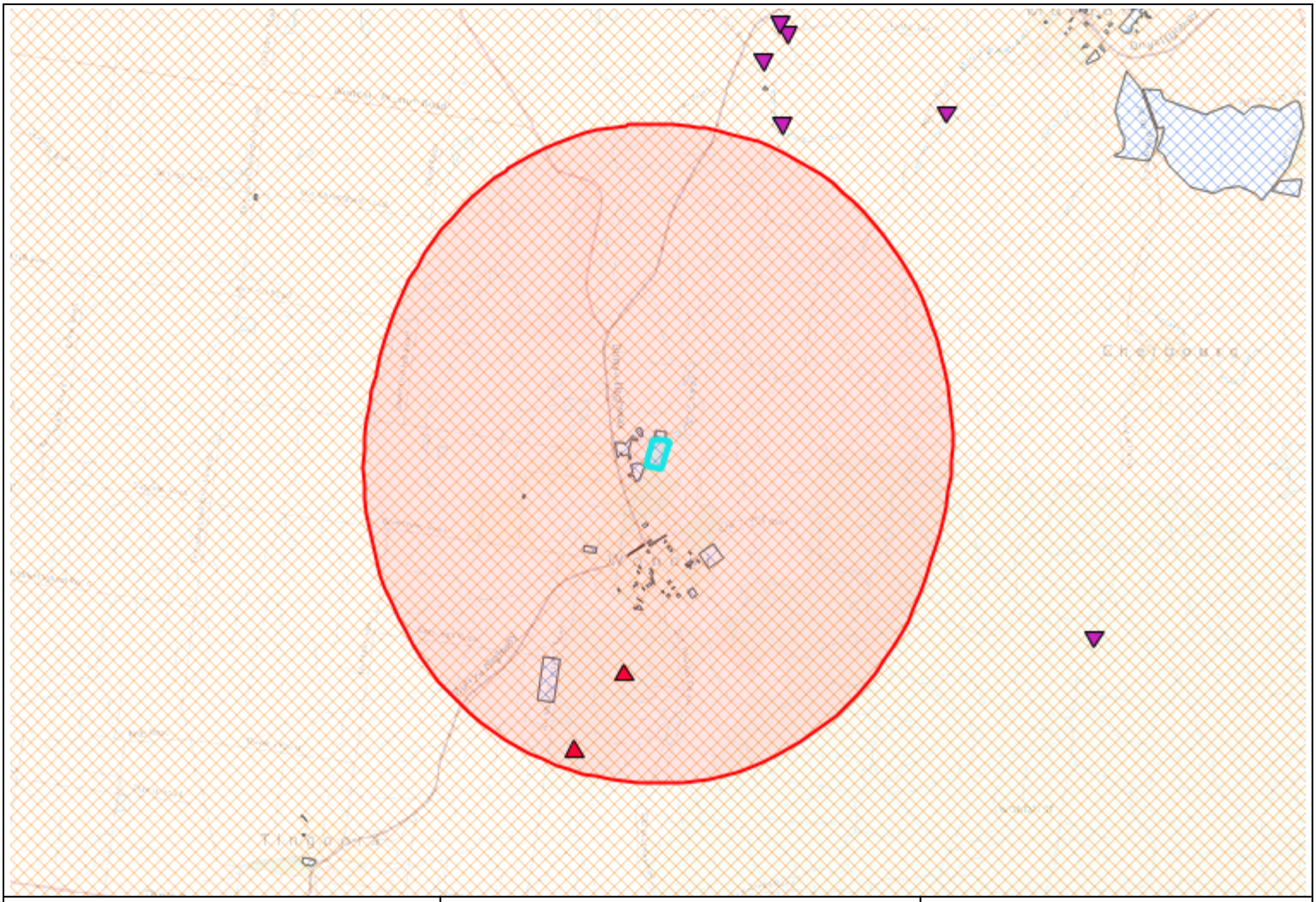

LEGEND

- CH Parties
- CH Bodies
- CHMPs
- Study Areas
- DLAs

Reference Number: 179067
Search Type: Lot/Plan
Lot: 106
Plan: SP331010
Shire: South Burnett Regional

Buffer Distance: 5000m

Cultural Heritage Sites

- Pre-2015 Point Site
- Post-2015 Point Site
- Mitigated Point Site
- Pre-2015 Area Site
- Post-2015 Area Site
- Mitigated Area Site

Map Projection: Geographic Latitude & Longitude (GDA2020).

The Department of Seniors, Disability Services and Aboriginal and Torres Strait Islander Partnerships (DSDSATSIP) is the custodian of spatial data provided by various third parties for inclusion in the Aboriginal and Torres Strait Islander cultural heritage online portal. This includes spatial data provided by the National Native Title Tribunal and Aboriginal and Torres Strait Islander parties.

Features shown on this map have been obtained from available sources. It is possible that errors and omissions may exist. The DSDSATSIP disclaims any liability for any errors or omissions that appear in this document.

Copyright protects this publication. Except for purposes permitted by the Copyright Act, reproduction by whatever means is prohibited without the prior written permission from the DSDSATSIP.

Map produced by the Cultural Heritage Unit, DSDSATSIP, Brisbane, Queensland, Australia on 14 February 2025.

Queensland Government

1:114,793

Metres 2,000 4,000

LOCALITY

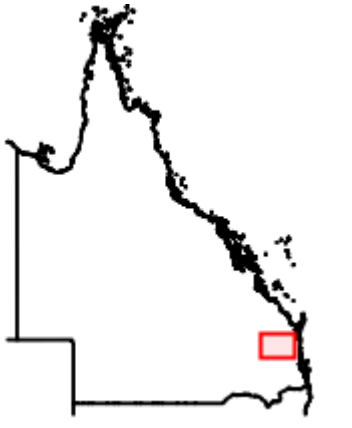

Search report generated on Feb 14, 2025, 10:54 AM

Cultural Heritage Database and Register Search Report

Cultural heritage site points for the area:

Site ID	Latitude	Longitude	Date Recorded	Attribute	Cultural Heritage Party
KC-0292-1	-26.346841	151.861466	15/02/2023	Scarred Tree	Wakka Wakka People #3 - Part A & B
KC-0293-1	-26.33589	151.869355	15/02/2023	Scarred Tree	Wakka Wakka People #3 - Part A & B

There are no Aboriginal or Torres Strait Islander cultural heritage site polygons recorded in your specific search area.

Cultural Heritage Party/ies for the area:

Reference No.	Federal Court No.	Name	Contact Details
	QUD276/2019	Wakka Wakka People #3	Wakka Wakka People #3 Queensland South Native Title Services PO Box 10832, Adelaide Street BRISBANE QLD 4000 Email: admin@wakkawakka.com.au Phone: (07) 3224 1200
	QUD276/2019	Wakka Wakka People #3 - Part A & B	Wakka Wakka Native Title Aboriginal Corporation RNTBC Queensland South Native Title Service Email: admin@wakkawakka.com.au PO Box 10832, Adelaide Street, BRISBANE QLD 4000 Phone: (07) 3224 1200

There are no Cultural Heritage Bodies recorded in your specific search area.

There are no Cultural Heritage Management Plans recorded in your specific search area.

There are no Designated Landscape Areas (DLA) recorded in your specific search area.

There are no Registered Cultural Heritage Study Areas recorded in your specific search area.

There are no National Heritage Areas (Indigenous values) recorded in your specific search area.

Glossary

Cultural Heritage Body: An entity registered under Part 4 of the Cultural Heritage Acts as an Aboriginal or Torres Strait Islander cultural heritage body for an area. The purpose of a cultural heritage body is to:

- identify the Aboriginal or Torres Strait Islander parties for an area
- serve as the first point of contact for cultural heritage matters.

Cultural Heritage Management Plan (CHMP): An agreement between a land user (sponsor) and Traditional Owners (endorsed party) developed under Part 7 of the Cultural Heritage Acts. The CHMP explains how land use activities can be managed to avoid or minimise harm to Aboriginal or Torres Strait Islander cultural heritage.

Cultural Heritage Party: Refers to a native title party for an area. A native title party is defined as:

- Registered native title holders (where native title has been recognised by the Federal Court of Australia).
- Registered native title claimants (whose native title claims are currently before the Federal Court of Australia).
- Previously registered native title claimants (the 'last claim standing') are native title claims that are no longer active and have been removed from the Register of Native Title Claims administered by the National Native Title Tribunal. Previously registered native title claimants will continue to be the native title party for that area providing:
    - there is no other registered native title claimant for the area; and
    - there is not, and never has been, a registered native title holder for the area.

The native title party maintains this status within the external boundaries of the claim even if native title has been extinguished.

Cultural heritage site points (pre 2015): Aboriginal and Torres Strait Islander cultural heritage sites and places recorded in the database as point data **before** 1 July 2015.

Cultural heritage site points (post 2015): Aboriginal and Torres Strait Islander cultural heritage sites and places recorded in the database as point data **after** 1 July 2015.

Cultural heritage site points (post 2015 mitigated): Aboriginal and Torres Strait Islander cultural heritage sites and places recorded in the database as point data after 1 July 2015 where the recorder has advised the department that the site has been mitigated.

Cultural heritage site polygons: Aboriginal and Torres Strait Islander cultural heritage sites and places recorded in the database as a polygon.

Designated Landscape Areas (DLA): Under the repealed *Cultural Record (Landscapes Queensland and Queensland Estate) Act 1987*, an area was declared a 'designated landscape area' (DLA) if it was deemed necessary or desirable for it to be preserved or to regulate access.

Indigenous Protected Areas (IPA): Areas of land and sea managed by Indigenous groups as protected areas for biodiversity conservation through voluntary agreements with the Australian Government. For further information about IPAs visit https://www.environment.gov.au/land/indigenous-protected-areas

National Heritage areas: Places listed on the National Heritage List for their outstanding heritage significance to Australia and are protected under the *Environment Protection and Biodiversity Conservation Act 1999*. For further information about the National Heritage List visit https://www.environment.gov.au/heritage/about/national

National Heritage Areas (Indigenous values): Places listed on the National Heritage list (Indigenous values) are recognised for their outstanding Indigenous cultural heritage significance to Australia and are protected under the *Environment Protection and Biodiversity Conservation Act 1999.* These areas are now included in the cultural heritage

register.

Registered Cultural Heritage Study Areas: Comprehensive studies of Aboriginal and or Torres Strait Islander cultural heritage in an area conducted under Part 6 of the Cultural Heritage Acts for the purpose of recording the findings of the study on the register.

Traditional Use of Marine Resources Agreement (TUMRA): Areas subject to agreement between Great Barrier Reef Traditional Owners and the Australian and Queensland governments on the management of traditional use activities on their sea country. For further information about TUMRAs visit https://www.gbrmpa.gov.au/our-partners/traditional-owners/traditional-use-of-marine-resources-agreements

World Heritage Areas: Places inscribed on the World Heritage List pursuant to the World Heritage Convention adopted by the United Nations Education, Scientific and Cultural Organisation (UNESCO) and are protected under the *Environment Protection and Biodiversity Conservation Act 1999*. For further information about World Heritage places in Queensland visit https://parks.des.qld.gov.au/management/managed-areas/world-heritage-areas

Disclaimer: *The Department of Seniors, Disability Services and Aboriginal and Torres Strait Islander Partnerships is the custodian of spatial data and information provided by various third parties for inclusion in the Aboriginal and Torres Strait Islander cultural heritage online portal. This includes spatial data provided by the National Native Title Tribunal and Aboriginal and Torres Strait Islander parties. Department of Seniors, Disability Services and Aboriginal and Torres Strait Islander Partnerships is not responsible for the accuracy of information provided by third parties or any errors in this search report arising from such information.*

□□ti□e□it□e□ e□i□ter

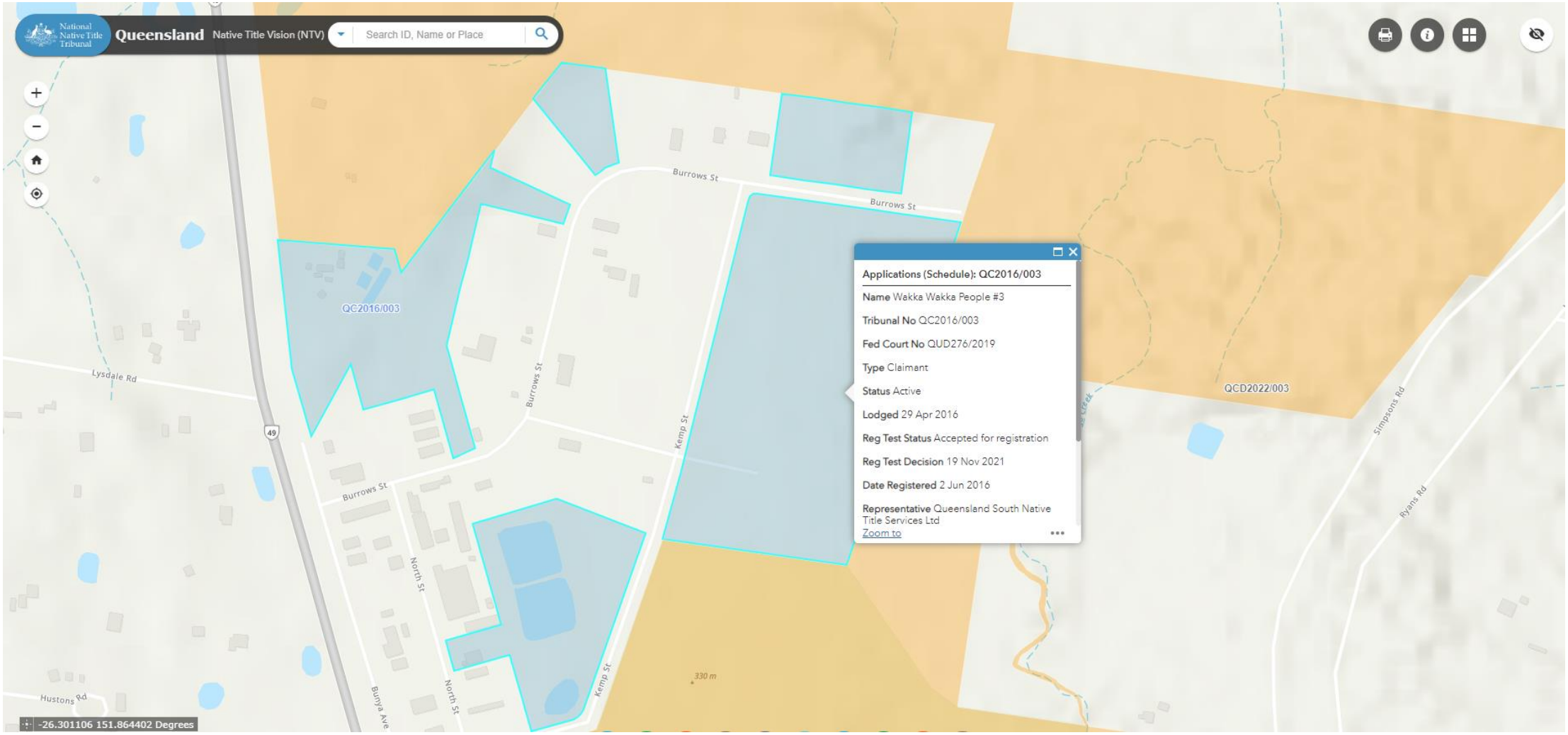

Australian Heritage Search

Australian Government
Department of Climate Change, Energy, the Environment and Water

Heritage
Australian Heritage Database

You are here: Environment home » Heritage » Australian Heritage Database

Search Results

new search

No results found.

Enter at least one search criterion.
Search Hints

Search | Reset form

Place name
J001401 - Parkside Timber wooden and laminated product manufacturing facility

Street name
2-30 Kemp Street

Town or suburb
Wondai

State
Queensland

Country
Australia

Advanced search options

List
All Lists
Different lists will provide different status and class options

Local Government Area

Place ID number

Legal status
--All--

Class
--All--

Keyword Search

☑ Description ☑ Statement of Significance ☑ Place history

Latitude/Longitude

N
Latitude 1
Longitude 1 S Longitude 2
W E Latitude 2 E E
S

○ Wholly within region
◉ Wholly or partially within region

Longitude coordinates should be entered as ddd.mm.ss
Latitude coordinates should be entered as dd.mm.ss

Map Ref No

1:100,000 eg 2357
1:250,000 eg SF-50-01

Search Hints

- Not all fields need to be filled in. The fewer you fill in the more results you will get.
- If you cannot find a place, check spelling and try alternative names. Reduce the number of words that you include and use fewer fields.
- The Local Government field used on its own will provide a comprehensive list of places in an area.

Report Produced: Tue Jun 20 14:57:47 2023

□ □ee□□□□d□ erit□□e□ e□i□ter

Print

Heritage register map

Displaying **1797** places

List | Download | Show places near me

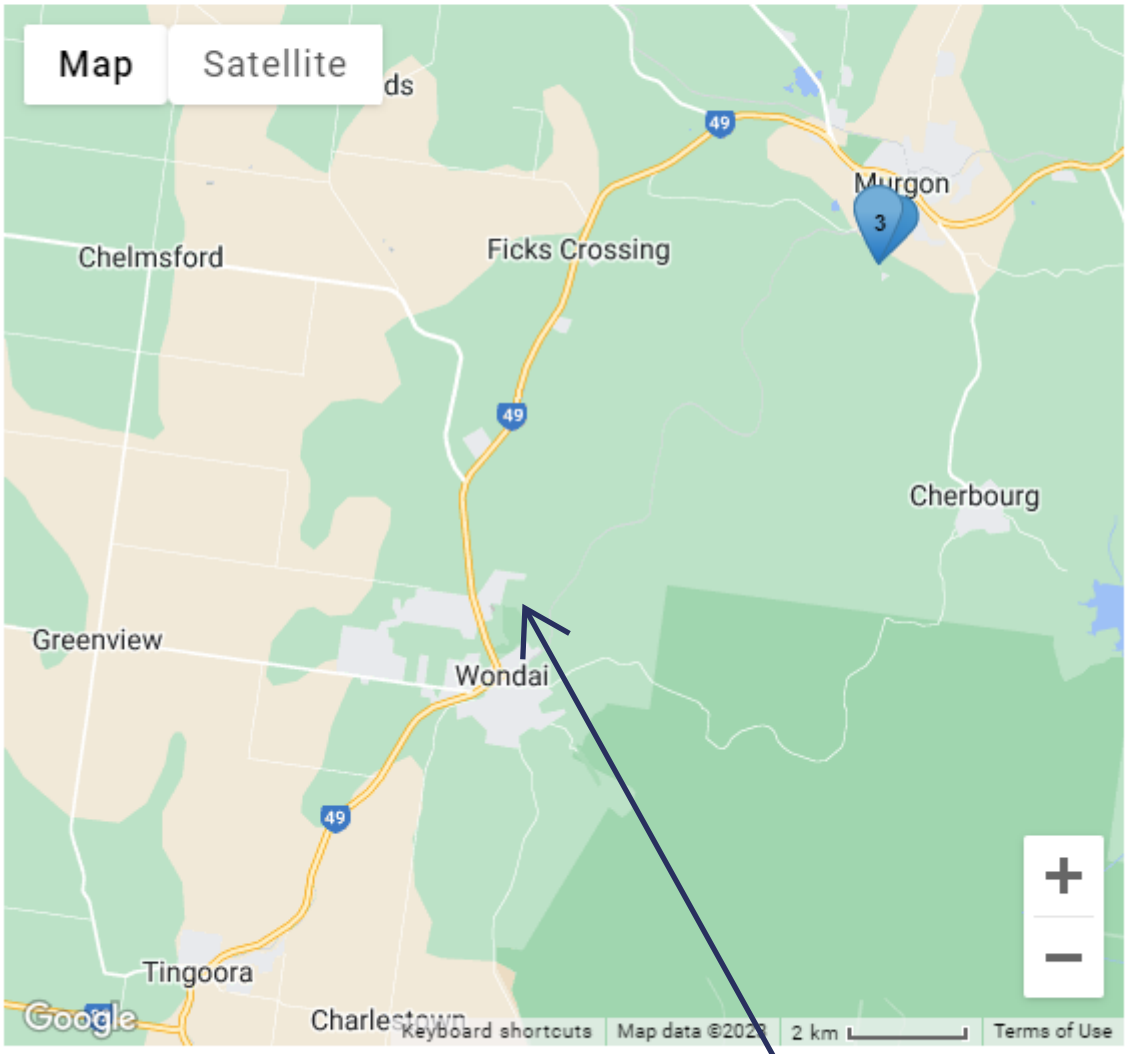

Last reviewed 1 July 2022

Last updated 14 November 2022

(cc) BY

Site

Appendix G Qualitative Risk Assessment Tool

Qualitative Measures of Consequence

Consequence	Natural Environment	Legal/Government	Community/Reputation/Media
Insignificant	Limited damage to minimal area of low significance.	Low-level legal issue. On the spot fine. Technical non-compliance, prosecution unlikely. Ongoing scrutiny/attention from regulator.	Low level social impacts. Public concern restricted to local complaints. Could not cause injury or disease to people.
Minor	Minor effects on biological or physical environment. Minor short-medium term damage to small area of limited significance.	Minor legal issues, non-compliances, and breaches of regulation. Minor prosecution or litigation possible. Significant hardship from regulator.	Minor to medium-term social impact on local population. Could cause first aid injury to people. Minor, adverse local public or media attention or complaints.
Moderate	Moderate effects on biological or physical environment (air, water) but not affecting ecosystem functioning. Moderate short-medium term widespread impacts (e.g., significant spills).	Serious breach of regulation with investigation or report to authority with prosecution or moderate fine possible. Significant difficulties in gaining approvals.	Ongoing social issues. Could cause injury to people which requires medical attention. Attention from regional media and/or heightened concern by local community. Criticism by NGOs. Environmental credentials moderately affected.
Major	Serious environmental effects with some impairment of ecosystem function. Relatively widespread medium-long term impacts.	Major breach of regulation with potential major fine and/or investigation and prosecution by authority. Project approval seriously affected.	Ongoing serious social issues. Could cause serious injury or disease to people. Significant adverse national media/pubic or NGO attention. Environmental credentials significantly affected.
Catastrophic	Very serious environmental effects with impairment of ecosystem function. Long term widespread effects on significant environment (e.g., National Park).	Investigation by authority with significant prosecution and fines. Very serious litigation, including class actions. License to operate threatened.	Very serious widespread social impacts with potential to significantly affect the wellbeing of the local community. Could kill or permanently disable people. Serious public or media outcry (international coverage). Damaging NGO campaign. Reputation severely damaged.

Qualitative Measures of Likelihood

Descriptor	Description	Guideline
Almost certain	Consequence is expected to occur in most circumstances	Occurs more than one per month
Likely	Consequence will probably occur in most circumstances	Occurs once every 1 month to 1 year
Occasionally	Consequence should occur at some time	Occurs once every 1 year to 10 years
Unlikely	Consequence could occur at some time	Occurs once every 10 years to 100 years
Rare	Consequence may only occur in exceptional circumstances	Occurs less than once every 100 years

Qualitative Risk Matrix

Likelihood	Consequence				
	Insignificant	Minor	Moderate	Major	Catastrophic
Almost certain	High	High	Extreme	Extreme	Extreme
Likely	Moderate	High	High	Extreme	Extreme
Occasionally	Low	Moderate	High	Extreme	Extreme
Unlikely	Low	Low	Moderate	High	Extreme
Rare	Low	Low	Moderate	High	High

range
environmental
consultants

www.rangeenviro.com.au

BRISBANE
Unit 1/7 Birubi Street
Coorparoo Qld 4151

TOOWOOMBA
Office A, 189 Hume St
Toowoomba QLD 4350

T 07 4588 6711
E admin@rangeenviro.com.au

ENGINEERS AND PROJECT MANAGERS
THE TRUSTED ENGINEERS

Preliminary Stormwater Management Report

Parkside Group

2-30 Kemp Street, Wondai, 4606

Lot 106 SP331010

Version	Authored By	Approved By	Date
1.0	David Eberhard	Allen Christensen	31 July 2023
2.0	Jordan Picton	Allen Christensen	02 May 2024
3.0	Jordan Picton	Philip De Guzman	21 March 2025
4.0	Jordan Picton	Philip De Guzman	01 August 2025
This version replaces all previous versions of this report.			

1. Introduction

This preliminary stormwater management plan forms part of the proposed industrial development at 2-30 Kemp Street, Wondai, Queensland, 4606 (Lot 106 SP331010).

The new development is part of a Glulam wood production facility. The planned developments consist of adding three new buildings to the site (relocated stacker building, new glulam factory and new briquette factory) with internal roads, hardstand areas and transitioning a majority of the site from grassed areas to semi-hardstand areas for on-site storage.

ATC Engineers have been engaged on behalf of the applicant to assess the stormwater management of the proposed development. This report will address the pre- and post-development stormwater flows, and any attenuation requirements, to demonstrate that the post-development flows can be adequately managed without material impacts on other properties or infrastructure.

2. Site Characteristics

2.1. Pre-development site description

The site is located at 2-30 Kemp Street, Lot 106 SP331010, Wondai as shown in *Figure 1*.

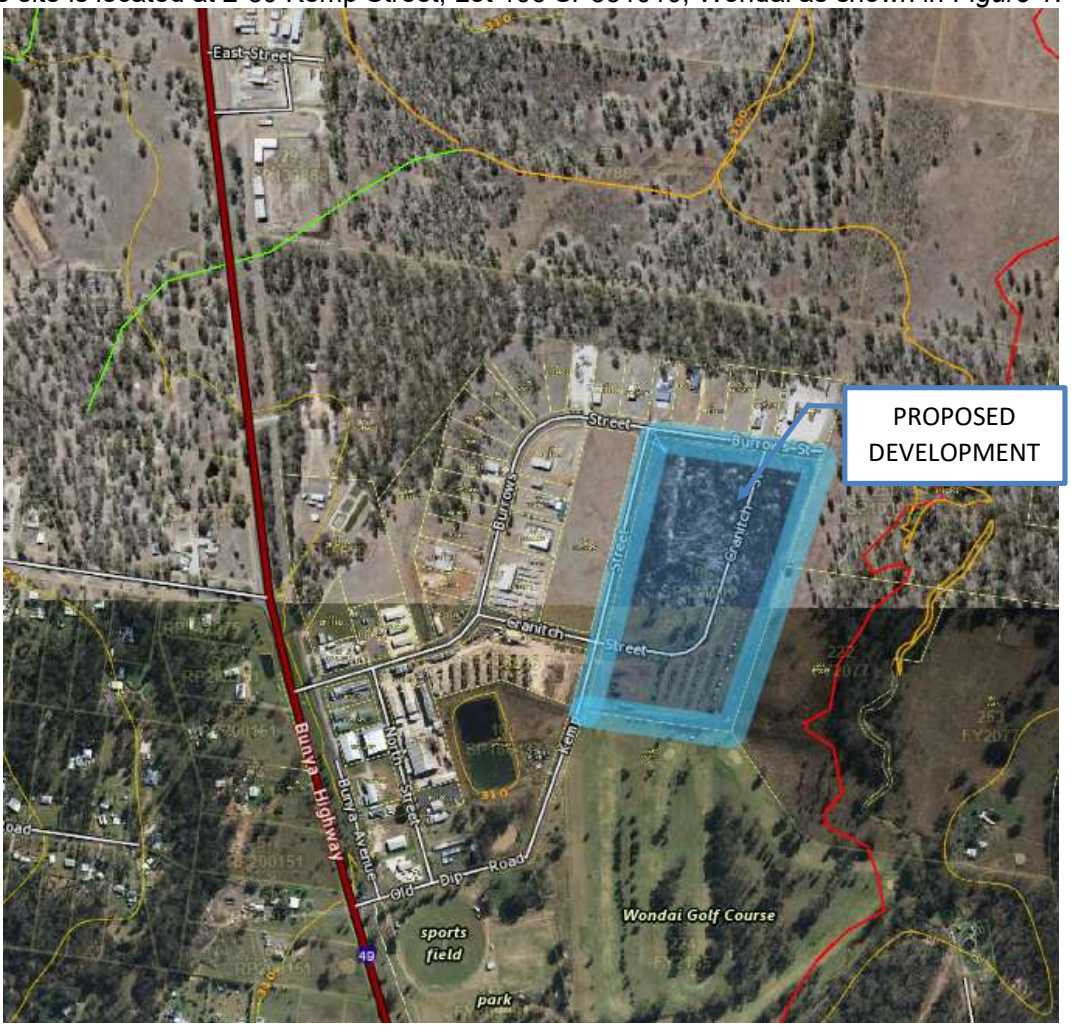

Figure 1 - Proposed Development Site at 2-30 Kemp Street, Wondai (Lot 106 SP331010) (Source: Queensland Globe)

The site has three existing access points to the development, with two accesses via the Kemp Street frontage on the west of the lot and one access from Burrows Street to the north.

The existing lot is situated within a typical industrial environment, with developed land to the west. The lot has poor drainage, and an estimated 1-2% surface grade is evident, with stormwater runoff currently discharging to the rear of the lot along the eastern boundary which ultimately discharges to Dingo Creek.

There was no evidence of scouring or other erosion issues on site during inspections undertaken by ATC on the 11th of May 2023.

The site has road and table drains in the industrial estate that mitigate any overland flow impacts, subject to having acceptable freeboard to table drains. Anecdotally, the roadside drainage within the industrial estate is known to have capacity limitations generally, due to the flat grades and shallow table drains. All existing vehicle crossovers to the site have a 300mm diameter polypropylene culvert. These culverts under crossovers have not been analysed as part of this report.

Figure 2 – Pre-Development Site Photos

3. Stormwater Analysis

3.1. Point of Discharge

The existing lot currently discharges to the eastern boundary, with land to the east being used for rural purposes. It is understood that Cranitch St east of Kemp Street has been formally closed and the road reserve has now been amalgamated to form part of Lot 106 SP331010.

The proposed development lot is affected by a flood hazard overlay. Siting of buildings should generally be on the western side of the lot towards Kemp Street. It is recommended that where buildings and useable areas are located close to the Cranitch street intersection, a minimum 300mm freeboard (preferred 500mm) from table drains to finished surface level be adopted to prevent inundation during more intense storm events.

The existing eastern boundary will be used as the point of discharge, with discharge being via sheet flow. Due to the existing falls of the site, little to no stormwater is expected to discharge to the existing table drain along Kemp Street.

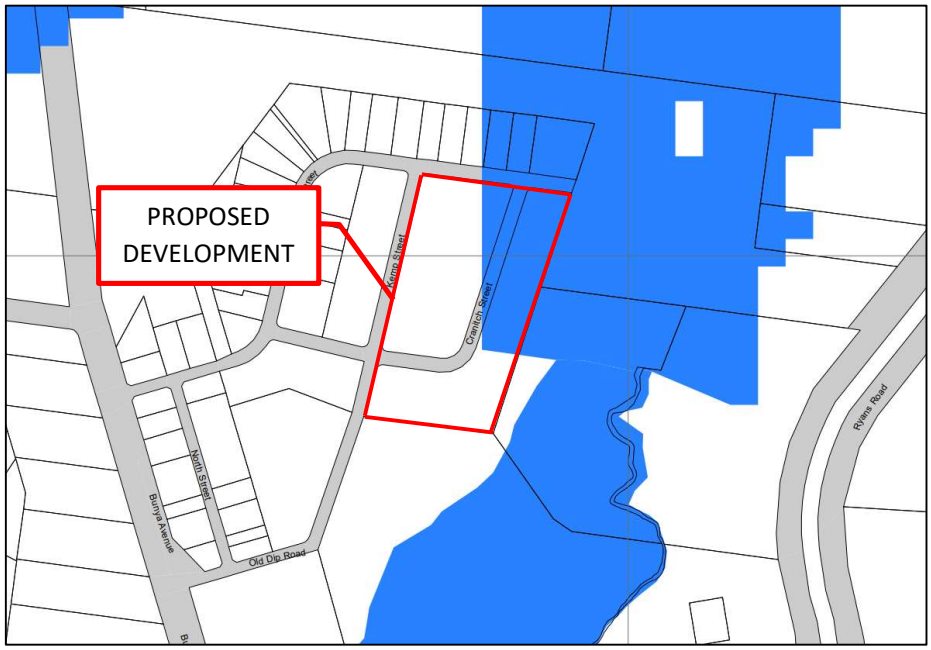

Figure 3 - Flood Overlay South Burnett Regional Council Planning Scheme

Figure 4: Lot Pre-Development Catchment Plan

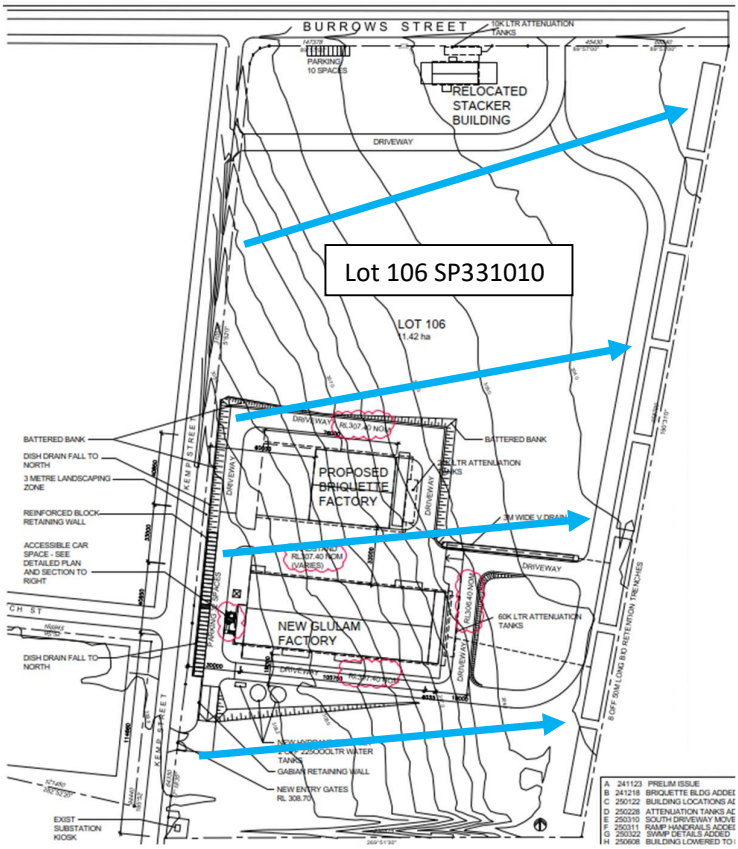

Figure 5: Lot Post-Development Catchment Plan (Source: Swell Architects – Site Plan – Rev I.)

A majority of the grassed area from the pre-development site conditions (seen in Figure 4) has been converted to a semi-hardstand to be used for on-site storage or laydown area. This area has been stripped of the top grassed layer leaving the natural clay soil, being graded and partially compacted (see Figure 6). This has resulted in a reduced amount of depression storage available in the area. The removal of grass from the area has increased the velocity of flows from the site, subsequently decreasing the time of concentration. The antecedent moisture condition of the site is assumed to be lesser, due to the soil being expected to dry out quicker without the top grassed layer. The soil type (infiltration) is not expected to change greatly due to the existing natural clay soil being very stiff to hard from the surface level to roughly 1.2-1.8m deep, as per the geotechnical logs by GSG Laboratories for Parkside Group, dated 20 February 2025 (Project No: WR 1372-1/2) and will be considered as a very slow infiltration rate for both pre- and post-development conditions.

Figure 6: Aerial Image showing Semi-hardstand (Semi-impervious) Area.

All internal driveways, manoeuvring areas and parking spaces are proposed to be constructed using a dust-suppressive gravel surface. These gravel areas are assumed to exhibit similar infiltration characteristics to other hardstand surfaces, having lesser infiltration than grassed areas but greater than fully paved or roofed areas). Therefore, all internal driveways will be treated as semi-impervious for modelling and assessment purposes.

3.2. Hydrologic Design

A hydrologic assessment has been undertaken for the development using the DRAINS software program (Version 2024.11.9103.14755). An analysis was conducted to determine the peak runoff flows for the pre- and post-development conditions, and any potential detention requirements. The 39.35% AEP minor and 1% AEP major storm events, with storm durations between 5 minutes to 4.5 hours, were used as part of the assessment.

For the purpose of this report, a conservative pre-development fraction impervious value was calculated using existing impervious areas. The post-development fraction impervious value was calculated using the proposed impervious areas from the proposal plans.

DRAINS Input

The inputs shown in Tables 1 and 2 were used for the stormwater modelling process. In Table 1, pre- and post-development site differences are based upon the change of ground condition from grassed to semi-hardstand or to gravel driveways and parking area (i.e. all previously pervious ground areas). Note that all semi-hardstand areas are assumed to have been graded and compacted and therefore will have a lesser depression storage compared to grassed areas. A depression storage for the semi-hardstand has been assumed within the model for the post-development condition, as presented in Table 1.

Table 1 - DRAINS Model Inputs

Hydrological Model	ILSAX
Paved / roofed (impervious) area depression storage (mm)	1
Supplementary area depression storage (mm)	1
Grassed (pervious) area depression storage (mm)	5
Semi-hardstand / gravelled (semi-impervious) area depression storage (mm)	2
Soil Type	4 (Very Slow Infiltration Rate)
Antecedent Moisture Condition Pre-development: Post-development:	 3 – Rather Wet 2 – Rather Dry

Catchment Information

The below areas and assumptions were used in the stormwater modelling process.

Table 2 – DRAINS Model Assumptions

Catchment	Area	Impervious	Supplementary	Pervious
Pre-development	114,200m^2	0% (0m^2)	1% (1,142m^2)	99% (112,916m^2)
Post-development	114,200m^2	6.9% (7,865m^2)	1.3% (1,524m^2)	91.8% (104,811m^2)

Peak Flows

The peak flow rates for the pre-development and post-development conditions, without and with attenuation, are shown in the table below. Peak flow rates shown in the below table may not be representative of the critical stormwater event under ARR guidelines.

The peak discharge from the site is seen to considerably increase in both minor and major storm events.

The attenuation strategy used within the model is connecting all roofed areas of the proposed glulam factory and office to 6 x 10,000L attenuation tanks, connecting all roofed areas of the proposed briquette factory to 3 x 5,000L attenuation tanks and connecting the roofed areas of the relocated stacker building to 2 x 5,000L attenuation tanks. The attenuation strategy also includes a bioretention trench along the eastern boundary of the site, with a total retention volume of 2,380m^3.

Table 3 – Pre- and Post-Development Peak Flows

Storm Duration	Peak Flow Discharges					
	Pre-development		Post-development		Post-development (attenuated)	
	Minor 39.35% AEP (m3/s)	Major 1% AEP (m3/s)	Minor 39.35% AEP (m3/s)	Major 1% AEP (m3/s)	Minor 39.35% AEP (m3/s)	Major 1% AEP (m3/s)
5 minutes	0.472	1.356	1.387	3.079	0.009	0.061
10	1.059	2.445	1.961	4.099	0.012	1.385
15	1.455	3.188	2.257	4.642	0.029	2.750
20	1.748	3.728	2.465	4.939	0.030	3.358
25	1.966	4.131	2.425	4.651	0.026	3.873
30	2.125	4.011	2.426	4.748	0.026	4.101
45	1.890	4.042	1.971	4.419	0.018	4.075
1 hour	1.954	3.848	2.090	4.115	0.021	3.886
1.5	1.832	3.022	1.847	3.039	0.362	2.939
2	1.710	2.892	1.852	2.710	0.362	2.939
3	1.668	2.684	1.727	2.781	0.479	2.773
4.5	1.309	1.947	1.355	1.891	0.701	1.892

A summary of the pre-development and post-development peak flows leaving the site are shown in the table below indicating reduction in peak flows from the pre-development to the attenuated post-development condition.

Table 4 - Peak Flow Discharges

Discharge Reference	Eastern boundary	
Storm Event	**Minor 39% AEP**	**Major 1% AEP**
Pre-Development (m^3/s)	**2.125**	**4.131**
Post-Development (m^3/s)	**2.465** (+16.0%)	**4.939** (+19.6%)
Post-Development (attenuated) (m^3/s)	**0.701** (-67.0%)	**4.101** (-0.7%)

Note: Percentages shown in *Table 4* represent the difference in post-development peak discharges compared to the pre-development site condition.

4. Analysis and Discussion

The peak discharge from the site is seen to increase in both minor and major storm events. Due to the increase in peak discharges being considerable, attenuation of stormwater on site is required.

The stormwater management strategy being proposed consists of attenuation through:

- 2 x 5,000L attenuation tanks for the relocated stacker building,
- 3 x 5,000L attenuation tanks for the new briquette factory
- 6 x 10,000L attenuation tanks for the new glulam factory and office, and,
- A 350m long bioretention trench along the eastern boundary of the site.

The attenuation tanks on the relocated stacker building are proposed to limit the peak runoff to the existing table drain on Burrows Street, due to its limited capacity.

The bioretention trench is being proposed to also act as a sediment and erosion control measure during operation of the site, with the outlets being wide, broad-crested overflow weirs so that any overflow is via sheet flow following the natural slope towards Dingo Creek. This will reduce the sediment and erosion issues with concentrated flows, will act as natural filtration system with sediment settling to the bottom of the trench, and will help attenuate the total peak flow discharges to below pre-development levels.

5. Stormwater Management Strategy

The overall stormwater strategy therefore is to:

- Site buildings outside the flood area.
- Adequately size all roof gutters for a 1% AEP storm event.
- Construct a bio-retention trench along the eastern boundary to collect stormwater runoff before it leaves the site to filter out sediment and attenuate peak flows.
- The proposed bioretention trench is to:
  - be 350m long by 5m wide at the base, broken up into 7 x 50m long segments (to reduce excavation requirements due to uneven levels along eastern boundary).
  - be 0.9m deep to the base of trench from the overflow weirs.
  - have 1:2 side slopes.
  - have the base level across the entire length of each segment of the trench.
  - have overflow weirs that are 35m wide in total (recommended 7 x 5m weirs at even spacing).
  - depth of the weir is to be 0.2m minimum, with a 0.1m freeboard above the top water level. See Appendix C for a section of the proposed bioretention trench.
  - have drainage layers as per Appendix C.
  - feature appropriate bioretention plants at the base as per www.waterbydesign.com.au.

- Provide a low point within the centre of the hardstand area directing water to an overland flow path on the northern side of the driveway. The overland flow path is to be a V-drain, 3m wide with 1:4 side slopes. Overland flow is to cross under the driveway near the eastern boundary via a 0.45m wide x 0.30m deep box culvert, discharging to the bio-retention trench, subject to detail design. See Appendix B for diagram.
- Connect all downpipes of the proposed glulam factory and office to 6 x 10,000L attenuation tanks with each 10,000L tank to have a 125mm orifice plate located 0.175m above the base, connecting to a 150mm low flow discharge pipe. The low flow discharge pipes from these tanks are to connect to 2 x 225mm uPVC pipes (3 x 150mm pipes per 225mm pipe) discharging into the bioretention trench at the eastern boundary. The pipe outlet will require a sloping concrete headwall, matching the 1:2 slope of the basin walls.
- Connect all downpipes of the proposed briquette factory to 3 x 5,000L attenuation tanks with each 5,000L tank to have a 125mm orifice plate located 0.175m above the base, connecting to a 150mm low flow discharge pipe. The low flow discharge pipes from these tanks are to connect to a 225mm uPVC pipe discharging into the overland flow path (V-drain) on the northern side of the nearby driveway. The pipe outlet will require a sloping concrete headwall.
- Connect roofed areas of the relocated stacker building to 2 x 5,000L slimline tanks with a 70mm orifice plate located 0.5m above the base of each tank connecting to a 100mm low flow discharge pipe, being piped directly into the existing table drain on Burrows Street, with a headwall at the discharge point.
- Allow for remainder of stormwater falling on the site area to follow natural ground contours towards the eastern site boundary as overland sheet flow.
- Monitor for erosion and adequately maintain the piped outlet points, inlet pipe to the bioretention basin and bioretention basin base, sides, and the uniformity of the basin perimeter level.
- Do not pond or direct water to adjacent properties and road reserves.

- To mitigate the effects of overland flow, the finished floor level shall be a minimum 300mm above design flood levels and higher than surrounding finished ground surface with stormwater runoff being diverted away and around the buildings – subject to detailed design.

A copy of the DRAINS Model and the proposed drainage layout can be found in Appendix A & B respectively.

6. Design Assumptions

The assumptions made in calculating the on-site flows are:

1. Stormwater runoff from the site (up to the 1% AEP event) can be safely discharged to Dingo Creek via overland sheet flow and all water falling on the relocated stacker building can be safely discharged to the existing table drain on Burrows Street.
2. Stormwater will act generally in accordance with the assumptions made in the DRAINS model.
3. The pervious areas in the post-development condition are to have different drainage and moisture properties as outlined in Section 3.1 of this report.

7. Erosion and Sediment Control

During construction, various sediment control measures should be implemented to reduce and control the sediment leaving the site and entering the nearby table drains or Dingo Creek.

Sediment control fences are to be constructed downstream of the planned construction areas to catch all potential overland flow carrying sediments from the construction site in a storm event. Sediment control fences should be placed to the east and north of both construction sites (glulam / briquette factories and relocated stacker building) generally perpendicular to the flow direction or slope of the ground.

Rock pads should be located at all vehicle entry/exit points to help prevent sediment and mud on vehicle tyres from leaving the site. Grassed filter strips should be introduced where construction activities are being conducted close to the table drain on Kemp and Burrows Streets.

See Figure 9 for the approximate locations of the proposed sediment and erosion control measures during construction.

SEDIMENT AND EROSION CONTROL

SE1. THE CONTRACTOR IS TO ENSURE THAT APPROPRIATE MEASURES ARE TAKEN TO LIMIT THE REMOVAL OF SEDIMENT FROM THE SITE.

SE2. IMPLEMENTATION OF (BUT NOT LIMITED TO) THE FOLLOWING MEASURES MAY REDUCE EROSION AND THE REMOVAL OF SEDIMENT:

2.1 MAINTENANCE OF EXISTING VEGETATION WHERE PRACTICAL;

2.2 INSTALLATION AND REGULAR MAINTENANCE OF SHAKEDOWN AREAS;

2.3 INSTALLATION AND REGULAR MAINTENANCE OF SEDIMENT FENCES;

2.4 GRASS SEEDING AND TURFING UPON COMPLETION OF PROJECT.

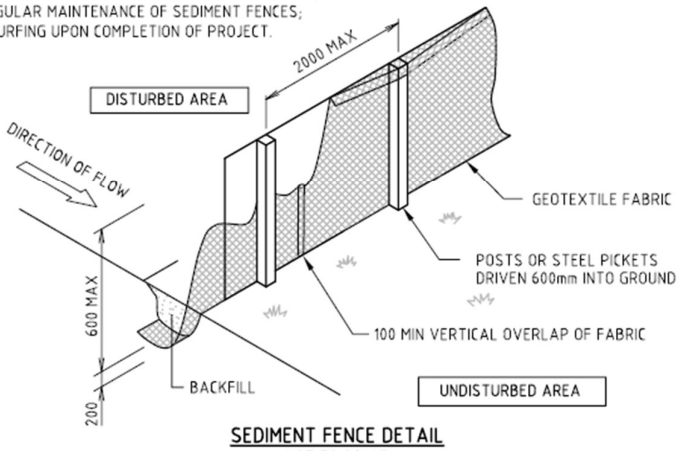

SEDIMENT FENCE DETAIL
NOT TO SCALE

Figure 7: Sediment Fence Detail

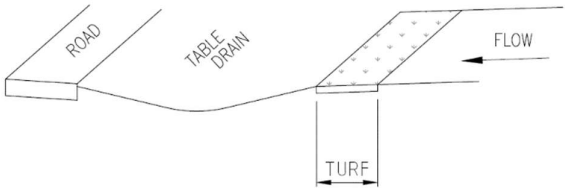

GRASS FILTER STRIPS
SCHEMATIC ONLY

MAINTENANCE PROGRAM FOR GRASS FILTER STRIPS:

THE SIGNIFICANT BUILD UP ON FILTER STRIPS INDICATES INSUFFICIENT ON-SITE EROSION AND SEDIMENT CONTROLS. THE SOURCE OF ANY EXCESSIVE SEDIMENT DEPOSITS IS TO BE INVESTIGATED AND RECTIFIED.

Figure 8: Grass Filter Strips Detail

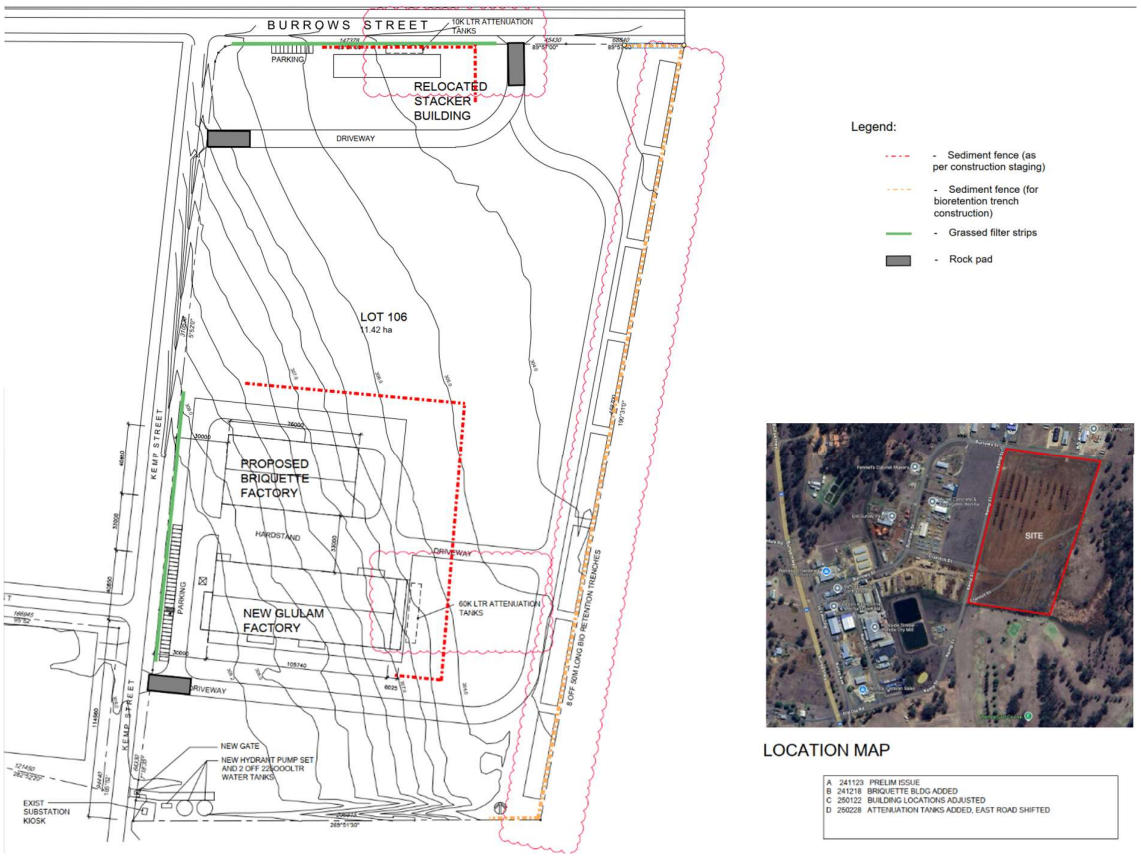

Figure 9: Sediment Control Measures Plan During Construction

During operation, mitigation of sediment being transported from site may be expected. This is due to the increase in the paved and building areas, and the filtration of sediments from any unpaved areas through the proposed bioretention trench along the eastern boundary. The additional stormwater runoff from the proposed glulam building and adjacent paved areas will be transferred directly to the basin via an underground pipe, as to not carry any additional sediment from the site. The bioretention trench at the boundary will act as a natural filtration system, as sediments entering the trench will settle to the base, so that any potential overflow in storm events should not contain significant sediment deposits. The overflow from this trench is to be via overland flow through wide, broad-crested overflow weirs, to reduce erosion downstream.

8. Conclusions

In summary:

- The development will lead to increases in stormwater flow discharging from the site for the specified design storm events.
- A 5m wide (base) x 350m long (broken up into 7 x 50m long segments) bioretention trench is to be constructed along the eastern boundary to capture and attenuate runoff from the site and filter sediments, with overflow discharging to Dingo Creek. Refer to Section 5 of this report for further details on the proposed trench.
- Provide an overland flow path for stormwater falling on hardstand area between the glulam and briquette factories. Overland flow path to be provided via a low point

within the centre of the hardstand area directing water to an overland flow path beside the road in the form of a V-drain, 3m wide with 1:4 side slopes. Flow within the channel is to pass under the road near the east boundary via a 0.45m wide x 0.30m deep box culvert to bio-retention trench, subject to detailed design.

- The effects of the increased discharge from the new glulam factory and office building can be managed by connecting all roofed areas to 6 x 10,000L attenuation tanks, with a 125mm orifice plate located 0.175m above the base of each tank, each connecting to a 150mm low flow discharge pipe. The low flow discharge pipes from these tanks are to connect to 2 x 225mm uPVC pipes discharging into the bioretention trench at the eastern boundary.
- The effects of the increased discharge from the new briquette factory building can be managed by connecting all roofed areas to 3 x 5,000L attenuation tanks, with a 125mm orifice plate located 0.175m above the base of each tank, each connecting to a 150mm low flow discharge pipe. The low flow discharge pipes from these tanks are to connect to a single 225mm uPVC pipe discharging into overland flow path (V-drain) with concrete headwall at pipe outlet location.
- 2 x 5,000L attenuation tanks should be connected to all roofed areas of the relocated stacker building, with a 70mm orifice plate located at 0.5m above the base of each tank, connected to a 100mm uPVC pipe discharging directly to the table drain on Burrows Street.
- Appropriate sediment and erosion control measures should be taken, using sediment fences, rock pads, and grass filter strips during construction as per Section 7 of this report. Post-construction sediment levels being carried to Dingo Creek are expected to be mitigated by the addition of the piped systems and bio-retention trench to filter out sediments from the site.
- The finished floor levels shall be set minimum 300mm above the design flood level at any point and higher than surrounding finished ground surface with stormwater runoff being diverted away and around the buildings, subject to detailed design.

I believe that the above response satisfies the requirements of QUDM and South Burnett Regional Council requirements with respect to stormwater management – subject to the application of reasonable and relevant conditions.

Should you require further assistance or information, please feel free to contact ATC on ☎07 4162 2378 or email office@atcengineers.com.au.

Kind regards,

Philip De Guzman
TECHNICAL SERVICES / DESIGN MANAGER
BSCE *cum laude* Meng Phd RPEQ (Civil / Structural)

APPENDIX A

DRAINS Layout

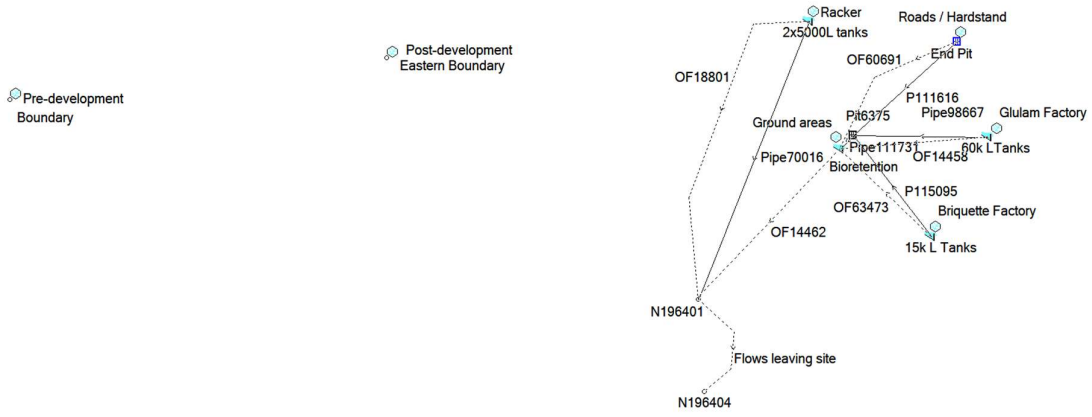

DRAINS Critical Storm Results

Minor (39% AEP)

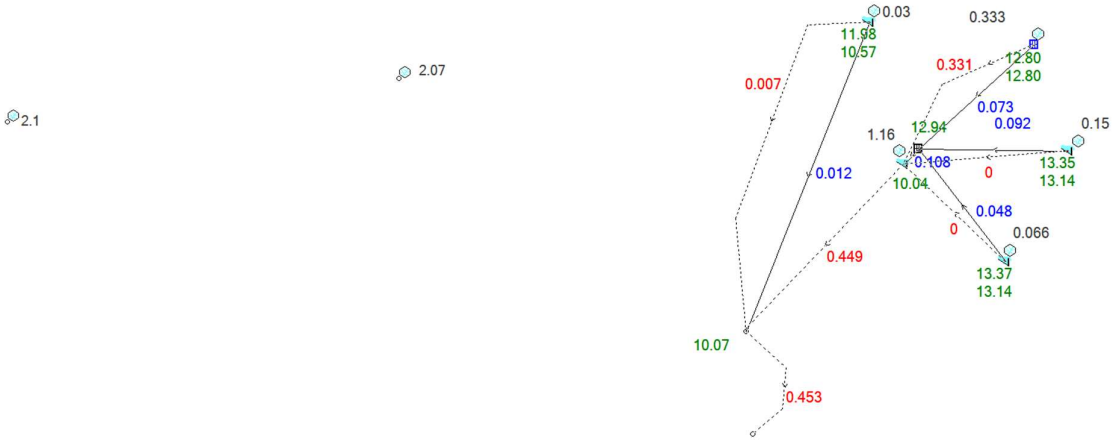

Major (1% AEP)

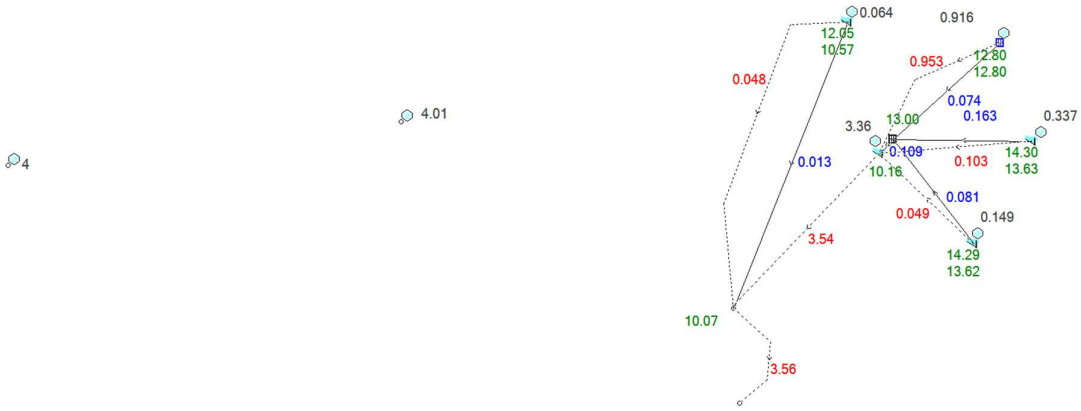
4
4.01
0.064
12.05
10.57
0.916
12.80
12.80
0.953
0.048
0.074
0.163
0.337
3.36
13.00
0.109
14.30
13.63
0.103
0.013
10.16
0.081
0.049
0.149
3.54
14.29
13.62
10.07
3.56

APPENDIX B

Proposed Drainage Layout – Site Overview

Note: Proposed Drainage Layouts based upon previous revision (Rev. D) of the site layout plan are included for diagrammatic purposes only.

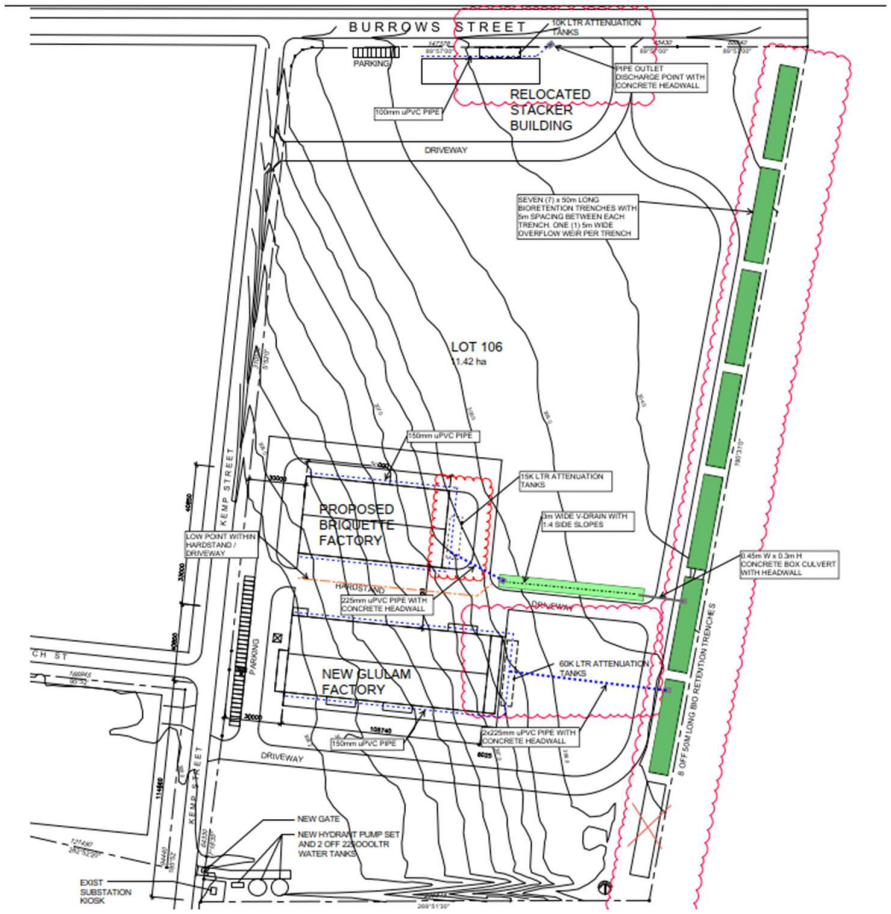

Proposed Drainage Layout – Relocated Stacker Building

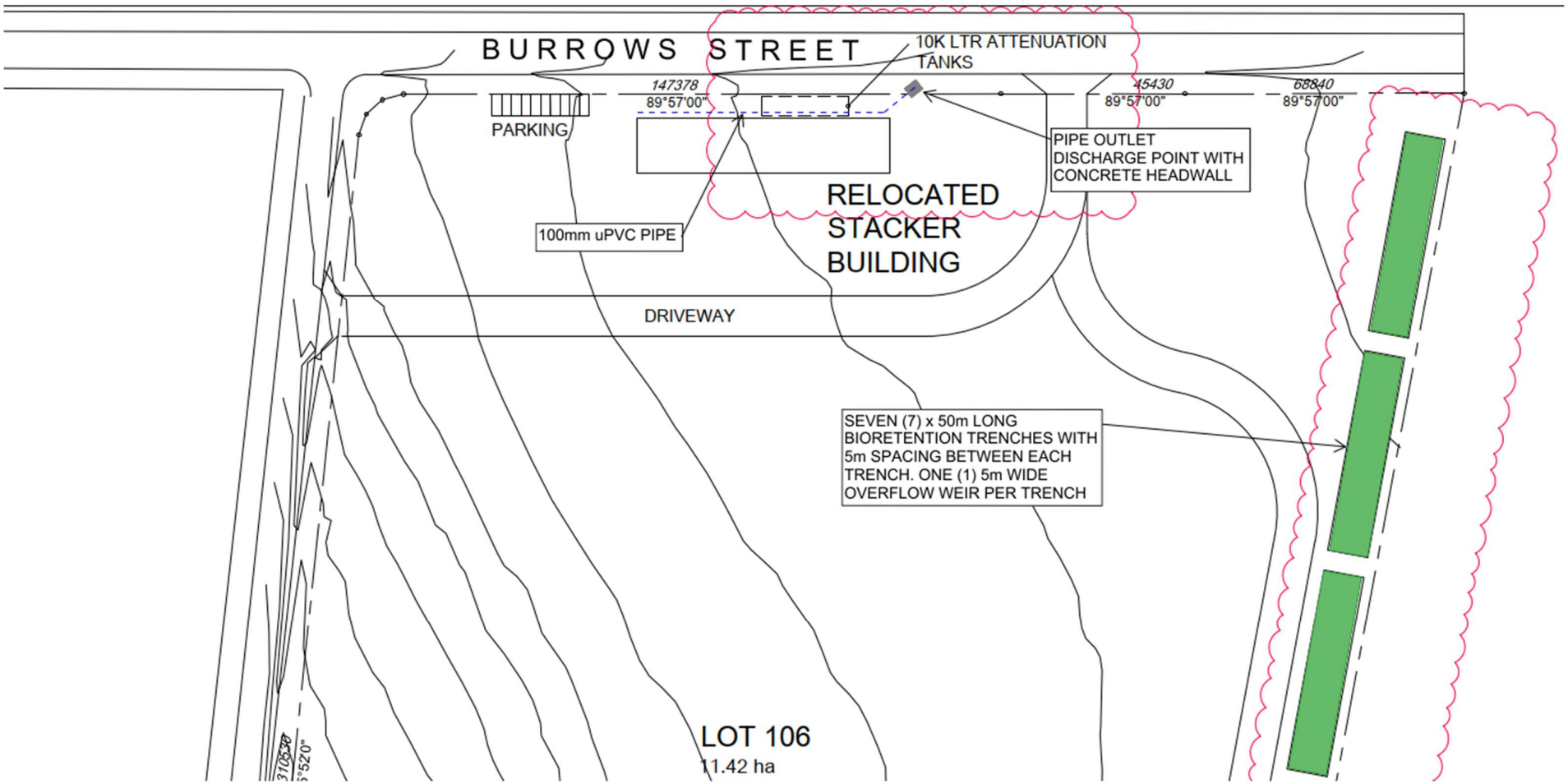

Proposed Drainage Layout – Glulam and Briquette Factory Buildings

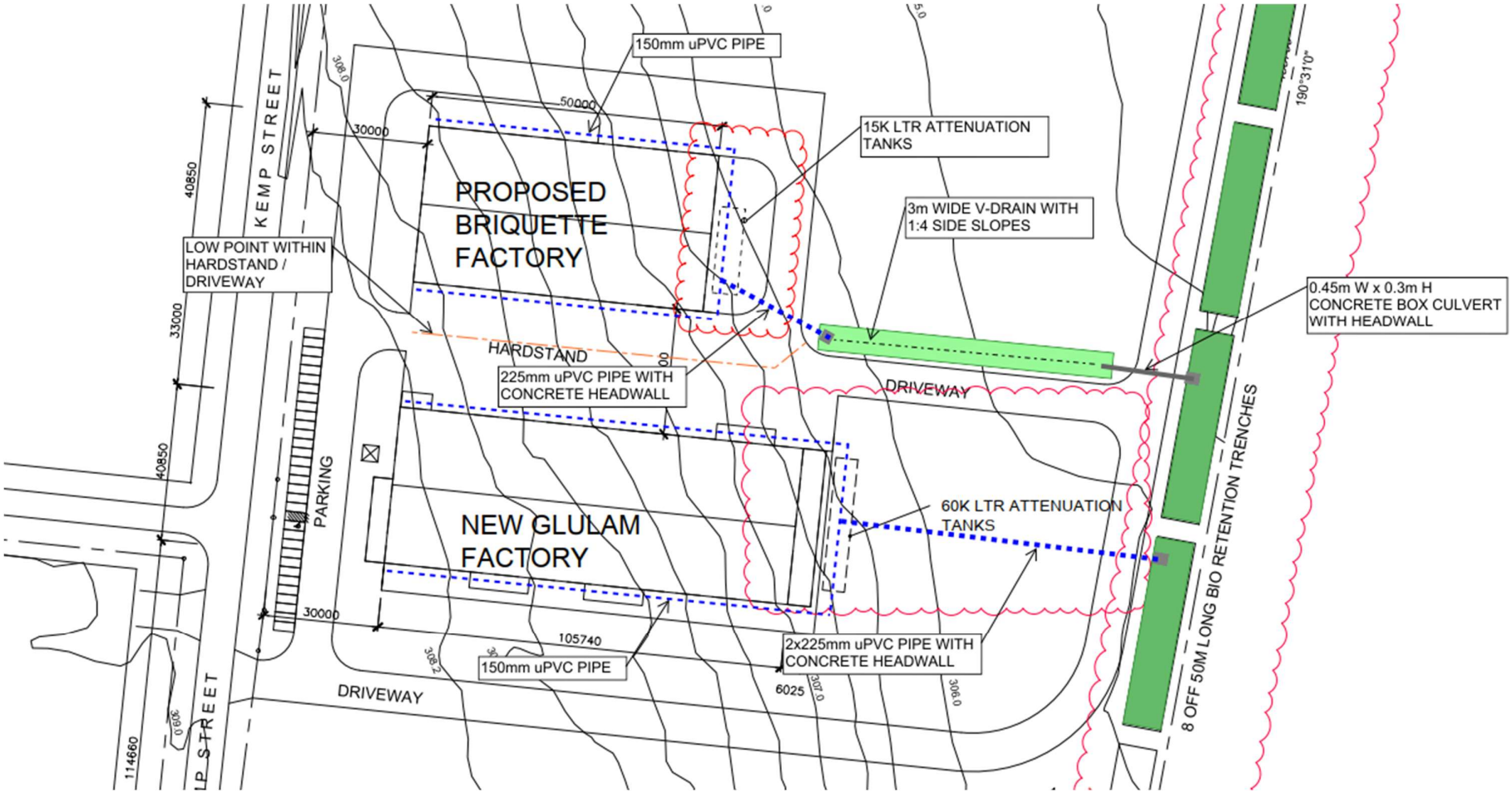

APPENDIX C: Bioretention Tench Details

Bioretention Trench Section

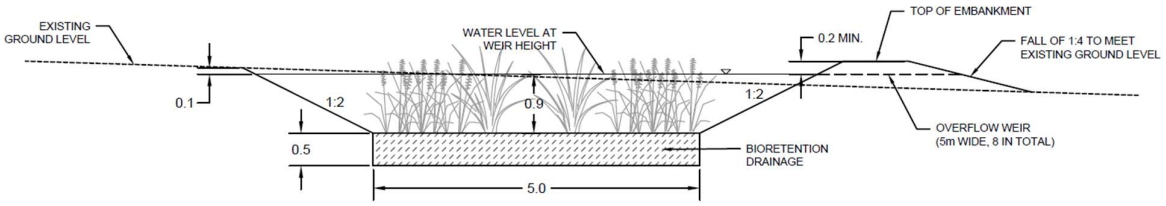

Bioretention Drainage Details

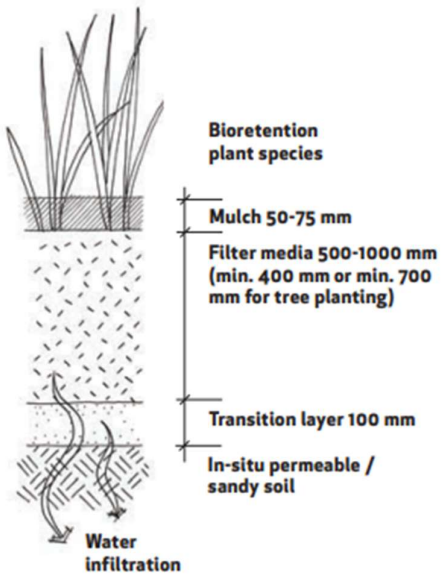

TYPE 4 PIPELESS

THE TRUSTED ENGINEERS
26 Alford Street, Kingaroy Qld 4610 | atcengineers.com.au | office@atcengineers.com.au

Appeal Rights

PLANNING ACT 2016 & THE PLANNING REGULATION 2017

Chapter 6 Dispute resolution

Part 1 Appeal rights

229 Appeals to tribunal or P&E Court

(1) Schedule 1 of the *Planning Act 2016* states –
   (a) Matters that may be appealed to –
      (i) either a tribunal or the P&E Court; or
      (ii) only a tribunal; or
      (iii) only the P&E Court; and
   (b) The person-
      (i) who may appeal a matter (**the *appellant***); and
      (ii) who is a respondent in an appeal of the matter; and
      (iii) who is a co-respondent in an appeal of the matter; and
      (iv) who may elect to be a co-respondent in an appeal of the matter.

(Refer to Schedule 1 of the Planning Act 2016)

(2) An appellant may start an appeal within the appeal period.
(3) The ***appeal period*** is –
   (a) for an appeal by a building advisory agency – 10 business days after a decision notice for the decision is given to the agency; or
   (b) for an appeal against a deemed refusal – at any time after the deemed refusal happens; or
   (c) for an appeal against a decision of the Minister, under chapter 7, part 4, to register premises or to renew the registration of premises – 20 business days after a notice us published under section 269(3)(a) or (4); or
   (d) for an appeal against an infrastructure charges notice – 20 business days after the infrastructure charges notice is given to the person; or
   (e) for an appeal about a deemed approval of a development application for which a decision notice has not been given – 30 business days after the applicant gives the deemed approval notice to the assessment manager; or
   (f) for any other appeal – 20 business days after a notice of the decision for the matter, including an enforcement notice, is given to the person.

   Note –
   See the P&E Court Act for the court's power to extend the appeal period.

(4) Each respondent and co-respondent for an appeal may be heard in the appeal.
(5) If an appeal is only about a referral agency's response, the assessment manager may apply to the tribunal or P&E Court to withdraw from the appeal.
(6) To remove any doubt. It is declared that an appeal against an infrastructure charges notice must not be about-
   (a) the adopted charge itself; or
   (b) for a decision about an offset or refund-
      (i) the establishment cost of trunk infrastructure identified in a LGIP; or
      (ii) the cost of infrastructure decided using the method included in the local government's charges resolution.

230 Notice of appeal

(1) An appellant starts an appeal by lodging, with the registrar of the tribunal or P&E Court, a notice of appeal that-
   (a) is in the approved form; and
   (b) succinctly states the grounds of the appeal.
(2) The notice of appeal must be accompanied by the required fee.
(3) The appellant or, for an appeal to a tribunal, the registrar must, within the service period, give a copy of the notice of appeal to –
   (a) the respondent for the appeal ; and
   (b) each co-respondent for the appeal; and
   (c) for an appeal about a development application under schedule 1, table 1, item 1 – each principal submitter for the development application; and
   (d) for and appeal about a change application under schedule 1, table 1, item 2 – each principal submitter for the change application; and
   (e) each person who may elect to become a co-respondent for the appeal, other than an eligible submitter who is not a principal submitter in an appeal under paragraph (c) or (d); and
   (f) for an appeal to the P&E Court – the chief executive; and
   (g) for an appeal to a tribunal under another Act – any other person who the registrar considers appropriate.
(4) The *service period* is –
   (a) if a submitter or advice agency started the appeal in the P&E Court – 2 business days after the appeal has started; or
   (b) otherwise – 10 business days after the appeal is started.
(5) A notice of appeal given to a person who may elect to be a co-respondent must state the effect of subsection (6).
(6) A person elects to be a co-respondent by filing a notice of election, in the approved form, within 10 business days after the notice of appeal is given to the person.

231 Other appeals

(1) Subject to this chapter, schedule 1 and the P&E Court Act, unless the Supreme Court decides a decision or other matter under this Act is affected by jurisdictional error, the decision or matter is non-appealable.
(2) The *Judicial Review Act 1991*, part 5 applies to the decision or matter to the extent it is affected by jurisdictional error.
(3) A person who, but for subsection (1) could have made an application under the Judicial Review Act 1991 in relation to the decision or matter, may apply under part 4 of that Act for a statement of reasons in relation to the decision or matter.
(4) In this section –
   decision includes-
   (a) conduct engaged in for the purpose of making a decision; and
   (b) other conduct that relates to the making of a decision; and
   (c) the making of a decision or failure to make a decision; and
   (d) a purported decision ; and
   (e) a deemed refusal.
   non-appealable, for a decision or matter, means the decision or matter-
   (a) is final and conclusive; and
   (b) may not be challenged, appealed against, reviewed, quashed, set aside or called into question in any other way under the Judicial Review Act 1991 or otherwise, whether by the Supreme Court, another court, a tribunal or another entity; and
   (c) is not subject to any declaratory, injunctive or other order of the Supreme Court, another court, a tribunal or another entity on any ground.

232 Rules of the P&E Court

(1) A person who is appealing to the P&E Court must comply with the rules of the court that apply to the appeal.
   However, the P&E Court may hear and decide an appeal even if the person has not complied with the rules of the P&E Court.